ANALYSIS OF PHOTOVOLTAIC ARRAY PERFORMANCE UNDER PARTIAL SHADING CONDITIONS

आंशिक छायांकन शर्तों के तहत फोटोवोल्टिक सरणी कार्य निष्पादन का विश्लेषण

PRANSHU DHUPIA

THESIS

Master of Technology

IN

ELECTRICAL ENGINEERING

(With Specialization in Power Electronics)

2014

DEPARTMENT OF ELECTRICAL ENGINEERING

COLLEGE OF TECHNOLOGY AND ENGINEERING

MAHARANA PRATAP UNIVERSITY OF AGRICULTURE AND TECHNOLOGY

UDAIPUR 313 001 (RAJASTHAN)

ANALYSIS OF PHOTOVOLTAIC ARRAY PERFORMANCE UNDER PARTIAL SHADING CONDITIONS

आंशिक छायांकन शर्तों के तहत फोटोवोल्टिक सरणी कार्य निष्पादन का विश्लेषण

THESIS

SUBMITTED TO THE

MAHARANA PRATAP UNIVERSITY OF AGRICULTURE AND TECHNOLOGY, UDAIPUR

IN PARTIAL FULFILLMENT OF THE REQUIREMENT FOR

THE DEGREE OF

Master of Technology

IN

ELECTRICAL ENGINEERING

(With specialization in Power Electronics)

BY

Mr. PRANSHU DHUPIA

2014

MAHARANA PRATAP UNIVERSITY OF AGRICULTURE AND TECHNOLOGY
COLLEGE OF TECHNOLOGY AND ENGINEERING, UDAIPUR

Dated:

CERTIFICATE - I

This is to certify that **Mr. PRANSHU DHUPIA** has successfully completed the comprehensive examination held on June, 2014 as required under the regulations for M.Tech. in Electrical Engineering with specialization in Power Electronics.

(Sh. Jai Kumar Maherchandani)
Major Advisor
Department of Electrical Engineering
College of Technology and Engineering, Udaipur

(Dr. R.R. Joshi)
Head
Department of Electrical Engineering
College of Technology and Engineering, Udaipur

MAHARANA PRATAP UNIVERSITY OF AGRICULTURE AND TECHNOLOGY
COLLEGE OF TECHNOLOGY AND ENGINEERING, UDAIPUR

Dated:

CERTIFICATE-II

This is to certify that this thesis entitled **"Analysis of Photovoltaic Array Performance Under Partial Shading Conditions"** submitted for the degree of **M. Tech.** in Electrical Engineering with specialization in Power Electronics embodies bonafide research work carried out by **Mr. PRANSHU DHUPIA** under my guidance and supervision and that no part of this thesis has been submitted for any other degree. The assistance and help received during the course of investigation have been fully acknowledged. The draft of the thesis was also approved by the advisory committee on October, 2014.

(Sh. Jai Kumar Maherchandani)
Major Advisor
Department of Electrical Engineering
College of Technology and Engineering, Udaipur

(Dr. R.R. Joshi)
Head
Department of Electrical Engineering
College of Technology and Engineering, Udaipur

(Dr. B.P. Nandwana)
DEAN
College of Technology and Engineering, Udaipur

MAHARANA PRATAP UNIVERSITY OF AGRICULTURE AND TECHNOLOGY
COLLEGE OF TECHNOLOGY AND ENGINEERING, UDAIPUR

Dated:

CERTIFICATE-III

This is to certify that this thesis entitled **"Analysis of Photovoltaic Array Performance Under Partial Shading Conditions"** submitted by **Mr. PRANSHU DHUPIA** to Maharana Pratap University of Agriculture and Technology, Udaipur, in partial fulfillment of the requirements for the degree of **M. Tech** in Electrical Engineering in the subject of **Power Electronics**, after recommendation by the external examiner was defended by the candidate before the following members of the examination committee. The performance of the candidate in the oral examination on his thesis has been found satisfactory; we therefore, recommend that the thesis be approved.

Sh. Jai Kumar Maherchandani
Major Advisor

Dr. Vinod Kumar
Advisor

Dr. S.D. Purohit
Advisor

Dr. P.K. Singh
DRI Nominee

Dr. R.R. Joshi
HEAD, Electrical

Dr. B.P. Nandwana
DEAN, CTAE

Approved
Director Resident Instruction

MPUAT, Udaipur

MAHARANA PRATAP UNIVERSITY OF AGRICULTURE AND TECHNOLOGY
COLLEGE OF TECHNOLOGY AND ENGINEERING, UDAIPUR

Dated:

CERTIFICATE-IV

This is to certify that **Mr. PRANSHU DHUPIA** student of **M. Tech** in Electrical Engineering in the subject of **Power Electronics,** Department of Electrical Engineering has made all corrections/modifications in the thesis entitled **"Analysis of Photovoltaic Array Performance Under Partial Shading Conditions"** which were suggested by the external examiner and the advisory committee in the oral examination held on…….. the final copies of the thesis duly bound and corrected were submitted on…..…… are enclosed here with approval

Sh. Jai Kumar Maherchandani
Major Advisor
Department of Electrical Engineering
College of Technology and Engineering, Udaipur

Dr. B.P. Nandwana
DEAN
College of Technology and Engineering, Udaipur

ACKNOWLEDGEMENT

It would be great pleasure to write a few words, which would although not suffice as acknowledgement of this long cherish effort, but in the absence of which, this report would necessary be incomplete. So these words of acknowledgement come as a small gesture towards all those people, without whom the successful completion of our project would not have been possible.

With great respect and humble regards I would like to acknowledge the valuable guidance and suggestion given to me by my major advisor **Sh. Jai Kumar Maherchandani**, Assistant Professor, Department of Electrical Engineering, College of Technology & Engineering. While doing simulation work and preparing this report, **Dr. R.R. Joshi** Professor & Head, Department of Electrical Engineering showed their special interest and always favoured me by giving his invaluable time and advice. His rich and varied experience as an academician immensely helped me in understanding the project clearly.

I would like to express gratitude to **Dr. Vinod Kumar Yadav** Assistant Professor, Department of Electrical Engineering, College of Technology & Engineering, and Udaipur for providing valuable guidance. Without his kind co-operation and guide this task was tedious.

I also wish to express my gratitude to **Dr. Naveen Jain**, Assistant Professor, Department of Electrical Engineering, C.T.A.E, for his supervision and guidance.

I am privileged to express my deep sense of gratitude to **Dr. B.P. Nandwana**, Dean, College of Technology & Engineering, Udaipur for his due attention and encouragement during the study and also providing me the necessary facilities during the course of research.

I am gratified to record sincere thanks to the members of the advisory committee, Words are insufficient to express my profound sense of gratitude to my guides, parents, and friends whose encouragement gave me great physical and moral strength.

Mr. PRANSHU DHUPIA

CONTENTS

Chapter	Title	Page No.
	Acknowledgement	
	List of Tables	
	List of Figures	
	List of Symbols and Abbreviations	
1	**INTRODUCTION**	**1**
	1.1 Preface	1
	1.2 Motivation	3
	1.3 PV System	6
	1.3.1 Array Subsystem: Array Field	6
	1.3.2 Array Subsystem: Array Control	9
	1.3.3 Power Conditioning Subsystem	10
	1.3.4 Energy Storage Subsystem	11
	1.3.5 System Monitoring and Control Subsystem	11
	1.3.6 Thermal Subsystem	11
	1.3.7 PV System Utility Interface Subsystem	12
	1.3.8 External Subsystems	12
	1.4 Performance Parameters of PV cells	12
	1.5 PV System Performance Parameters	13
	1.6 Mismatch Losses	14
	1.7 Summary	17
	1.8 Thesis Objectives	17
	1.9 Thesis Outline	18
2	**LITERATURE REVIEW**	**19-51**
3	**MODELING AND SIMULATION FOR PARTIAL SHADING STUDY**	**52-60**
	3.1 Introduction	52
	3.2 PV Cell	52
	3.3 PV Module	53

3.4 PV Array 55

3.5 PV Farm 58

3.6 Summary 60

4 OPTIMAL TOTAL-CROSS-TIED INTERCONNECTION TO REDUCE MISMATCH LOSSES 61-81

4.1 Introduction 61

4.2 Mismatch Losses 61

4.2.1 Array Maximum Power Point (MPP) is not coherent with those of the individual modules 62

4.2.2 MPPT is misled by existence of multiple MPPs 62

4.2.3 Bypass diodes are turned ON 63

4.2.4 Reverse currents 64

4.3 Interconnection Schemes 64

4.4 Optimal-Total-Cross-Tied Interconnection 65

4.4.1 Existence Variable 66

4.4.2 Kirchhoff's Laws' Constraints 67

4.4.3 Modules' Model Constraints 68

4.4.4 Logical Constraints 68

4.5 Solution Algorithm and Simulation Model 69

4.6 Performance Ratio 70

4.7 Application Examples 70

4.7.1 Application Example 1 71

4.7.1.1 Situation (a) 72

4.7.1.2 Situation (b) 73

4.7.1.1 Situation (c) 75

4.7.2 Application Example 2 76

4.7.2.1 Situation (a) 77

4.7.2.2 Situation (b) 78

4.7.2.3 Situation (c) 79

4.8 Conclusion 80

5 OPTIMAL PHOTOVOLTAIC ARRAY RECONFIGURATION TO REDUCE PARTIAL SHADING LOSSES **82-97**

5.1 Introduction 82

5.2 Clouds Movement 82

5.3 Partial Shading Losses 83

5.4 Partial Shading Loss Reduction 84

5.4.1 Distributed MPPT 84

5.4.2 Multi-level inverters 84

5.4.3 Photovoltaic array reconfiguration 84

5.5 Optimal PV Array Reconfiguration 86

5.6 Switches and Sensors Requirements 88

5.7 Optimization Algorithm and Simulation Model 89

5.8 Performance Ratio and Economical Evaluation Method 89

5.9 Application Examples 90

5.9.1 Application Example 1: Single-Row Shading 91

5.9.2 Application Example 2: Double-Row Shading 92

5.9.3 Application Example 3: Quarter-Array Shading 94

5.9.4 Application Example 4: Oblique Shading 96

5.10 Conclusion 97

6 CONCLUSION **98-99**

6.1 Summary 98

6.2 Contributions 98

6.3 Future Work 99

REFERNCES **100-105**

ABSTRACT IN ENGLISH 106

ABSTRACT IN HINDI 107

APPENDICES 108

PUBLICATIONS FROM THESIS 109

LIST OF TABLES

Table	Title	Page
1.1	Terrestrial cell and module efficiencies measured under STC*	8
1.2	Array tracking modes	9
1.3	A comparison of different power conditioning concepts	11
4.1	Situation (a) simulation results	73
4.2	Situation (b) simulation results	74
4.3	Situation (c) simulation results	75
4.4	Situation (a) simulation results	77
4.5	Situation (b), simulation results	78
4.6	Situation (c) simulation results	79
5.1	Application Example 1 : Array and modules' powers	91
5.2	Application Example 2 : Array and modules' powers	93
5.3	Application Example 3 : Array and modules' powers	95
5.4	Application Example 4 : Array and modules' powers	96

LIST OF FIGURES

Figure	Title	Page
1.1	PV applications	2
1.2	Cumulative installed terrestrial PV power in IEA countries	2
1.3	Dust partial shading in California PV farm	3
1.4	Clouds partial shading in Sarnia PV farm	4
1.5	Snow partial shading in Sarnia PV farm	4
1.6	Sarnia PV farm is installed on a large area and in landscape to avoid array partial shading	5
1.7	A PV farm installed in portrait to reduce installation cost	5
1.8	A PV array which large number of rows to reduce installation cost	6
1.9	Block Diagram of general PV system	7
1.10	(a) 6 x 4 SP interconnection; (b) 6 x 4 TCT interconnection; (c) 6 x 4 BL interconnection; (d) 6 x 4 HC interconnection.	8
1.11	Decomposition of array field	9
1.12	(a) Central inverter concept; (b) String inverter concept; (c) Modular inverter concept	10
3.1	PV cell model	53
3.2	PV module connected in series-parallel style	54
3.3	I-V characteristics of Shell SQ85-P module	54
3.4	PV characteristics of Shell SQ-85P module	55
3.5	PV array connected in TCT	56
3.6	IV characteristics of the PV array	57
3.7	PV characteristics of the PV array	57
3.8	Non-uniform irradiance condition	57
3.9	PV characteristics for non-uniform irradiance levels without by-pass diodes	58
3.10	PV characteristics for non-uniform irradiance levels with by-pass diodes	58
3.11	String PV farm concept	59
3.12	Simulink Model of PV Array	60

4.1	Main PV module interconnection styles : (a) 6 × 4 SP interconnection, (b) 6 × 4 TCT interconnection, (c) 6 × 4 BL interconnection and (d) 6 × 4 HC interconnection.	64
4.2	A number of different Partial Shading Situations	65
4.3	A PV array composed of m parallel circuits with n modules per parallel circuit	66
4.4	PV module single-diode model.	70
4.5	Three easy-to-predict partial shading situations	71
4.6	Three partial shading situations	71
4.7	(a) TCT interconnection; (b) OTCT interconnection	72
4.8	situation (a) interconnections' P-V characteristics	73
4.9	Situation (b) interconnections' P-V characteristics	74
4.10	Situation (c) interconnections' P-V characteristics	76
4.11	Three partial shading situations	76
4.12	(a) TCT interconnection; (b) OTCT interconnection	77
4.13	situation (a) interconnections' P-V characteristics	78
4.14	situation (b) interconnections' P-V characteristics	79
4.15	situation (c) interconnections' P-V characteristics	80
5.1	Shading, partial shading and misleading losses for a photovoltaic array	83
5.2	Reconfigurable PV array	87
5.3	A reconfigurable PV module requires a double-pole m-throw switch	88
5.4	Application Example 1 : (a) TCT irradiance levels; (b) HRPVA effective irradiance levels;(c) FRPVA effective irradiance levels	91
5.5	Application Example 1 : Arrays' P-V characteristics	92
5.6	Application Example 2 : (a) Applied irradiance levels; (b) HRPVA effective irradiance levels; (c) FRPVA effective irradiance levels	93
5.7	Application Example 2 : Arrays' P-V characteristics	94
5.8	Application Example 3 : (a) Applied irradiance levels; (b) RPVA effective Irradiance levels ; (c) FRPVA effective irradiance levels	94
5.9	Application Example 3 : Arrays' P-V characteristics	95
5.10	Application Example 4 : (a) Applied irradiance levels; (b) RPVA effective irradiance levels ; (c) FRPVA effective irradiance levels	96
5.11	Application Example 4 : Arrays' P-V characteristics	97

LIST OF SYMBOLS AND ABBREVIATIONS

PV	Photovoltaic
CF	Capacity Factor
PCS	Power Conditioning System
MPPT	Maximum Power Point Tracking
P&O	Perturbation and Observation
CCM	Continuous Conduction Mode
DCM	Discontinuous Conduction Mode
VSI	Voltage Source Inverter
PWM	Pulse Width Modulation
VSC	Voltage Source Converter

CHAPTER 1

INTRODUCTION

1.1 PREFACE

Energy production from renewable energy sources is accelerating due to the increase in oil prices, depletion of fossil fuel reservoirs, energy security concerns, worries about climate change and public health concerns. Known Renewable energy sources include hydro, wind, tidal, geothermal, bio, and solar. The energy received from solar irradiation in the form of light can be directly converted to electricity through Photovoltaic (PV) process. Photovoltaic conversion does not produce any harmful byproducts; it is renewable and clean. Also, it does not have any moving parts, which makes it an attractive solution from the maintenance requirements and life span points of view.

PV power systems offer a variety of applications, ranging from a few miliwatts to tens of megawatts. These applications could be non-terrestrial or terrestrial. Non-terrestrial applications are like calculators, mobiles and satellites, while terrestrial applications are like buildings, pumps and telecommunication antennas. Terrestrial applications are divided into stand-alone systems-which are not connected to the electrical utility gridand utility grid-connected systems. Stand-alone systems could be subdivided into domestic applications like households and villages and non-domestic applications like telecommunications, pumps and navigational aids. Also, utility-connected systems could be subdivided into residential, intermediate and central station. The residential and intermediate are treated as Distributed Generation (DG) and the central station is treated as a power plant. Figure 1-1 shows PV applications classification. The focus of this thesis is on terrestrial applications, although the results could be applied to other applications as well.

In the year 2010, about 15 GW of new terrestrial PV was installed in International Energy Agency (IEA) Countries, showing about 75% increase over the installed capacity in 2009. These new installations increased the total installed capacity in IEA countries to about 35 GW at the end of 2010. Figure 1.2 shows the total installed capacity of terrestrial PV power in IEA countries. Canada’s installed

capacity reached 300 MW at the end of 2010, making Canada one of the top ten IEA countries in installing PV. In Ontario, there is a great incentive for investing in PV through Ontario's Feed-In Tariff (FIT) Program, which is a pricing structure for renewable electricity production. This program pays from 44.3 to 80.2 ¢/kWh for the electricity generated from solar energy and from 13.5 to 19 ¢/kWh for electricity generated from wind energy. This incentivemotivated companies like First Solar and Enbridge to build the largest PV farm in the world of 80MW capacities in Sarnia, Ontario.

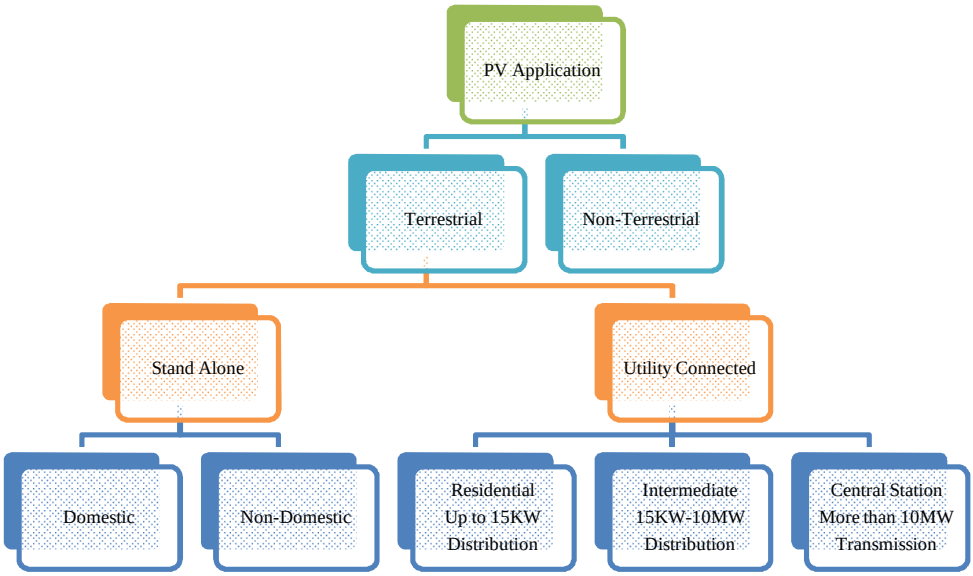

Figure 1.1: PV applications

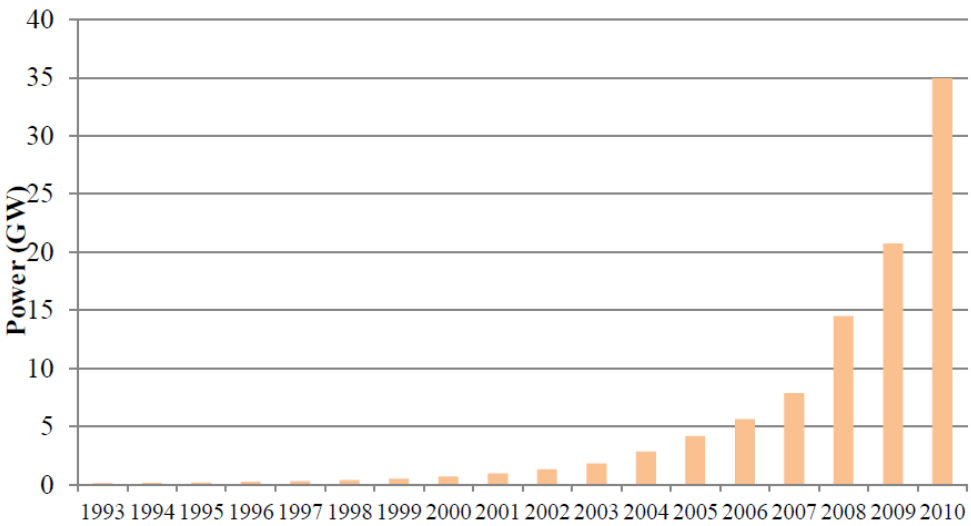

Figure 1.2: Cumulative installed terrestrial PV power in IEA countries

1.2 MOTIVATION

The use of PV systems for power generation brings many challenges. For example, neighboring buildings, trees, arrays, snow, soiling or passing clouds can cause PV arrays to be partially shaded. Moreover, loose connections, animal bits or bad installation can cause series arc faults in PV arrays.

The following points are the motivations behind this thesis.

1. In Building-Integrated photovoltaic (BIPV), partial shading causes an annual energy loss of 5.10 %, as reported in Germany, Japan and USA.

2. In PV farms, partial shading causes an annual energy loss of 2.7 %, as reported in Spain. Figure 1.3 shows partial shading in a PV farm in California due to dust and Figures 1.4 and 1.5 show partial shading in Sarnia PV farm due to clouds and snow. In addition to annual energy losses, PV farms are usually installed over large areas to avoid partial shading caused by consecutive rows, as shown in Figure 1.6, thus increasing the land cost. Moreover, PV arrays are usually installed in landscape installation with reduced number of rows to avoid partial shading losses which increases the installation cost when compared to portrait installation, shown in Figure 1.7, and high number of rows, shown in Figure 1.8.

Figure 1.3: Dust partial shading in California PV farm

3. Series arc faults cause fire, severe damage and profit loss to PV systems, as reported in many countries around the world and shown in Figure 1.9. Therefore, the 2011 National American Electrical Code requires series arc fault detection in any PV systems operating at a voltage greater than or equal to 80 V.

Figure 1.4: Clouds partial shading in Sarnia PV farm

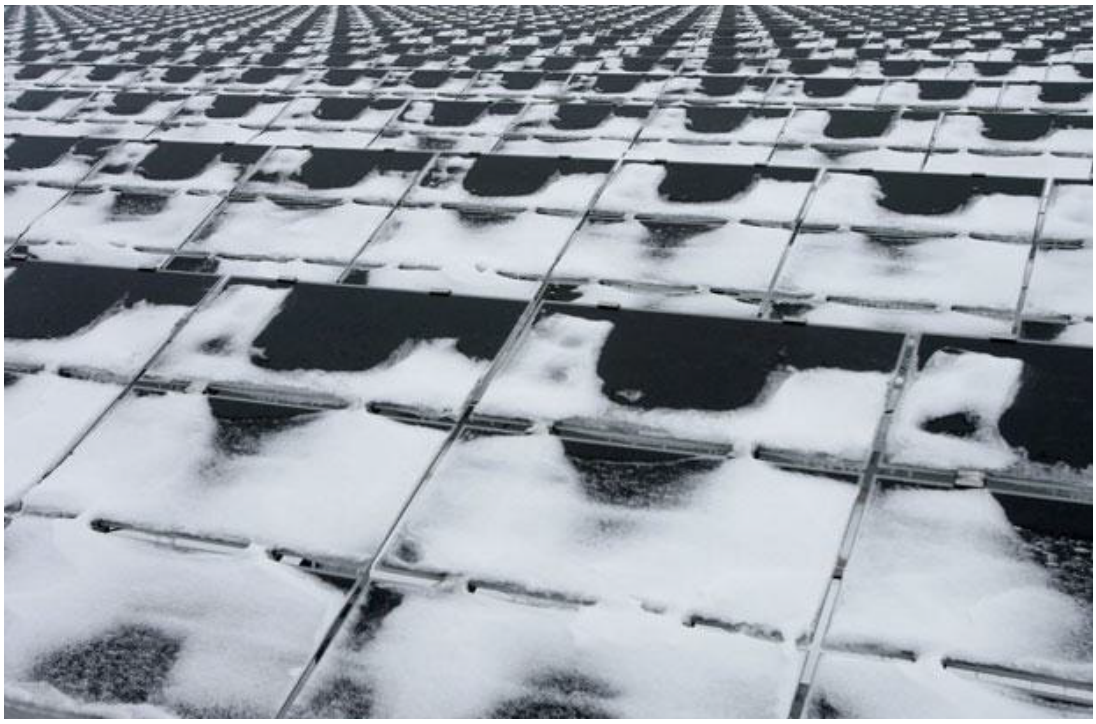

Figure 1.5: Snow partial shading in Sarnia PV farm

Figure 1.6: Sarnia PV farm is installed on a large area and in landscape to avoid array partial shading

Figure 1.7: A PV farm installed in portrait to reduce installation cost

Figure 1.8: A PV array which large number of rows to reduce installation cost

1.3 PV SYSTEM

A PV system has the following subsystems: PV array, power conditioning, system monitoring and control, PV system-utility interface, energy storage and thermal management, as shown in Figure 1.9. The PV system-utility interface and the thermal subsystems (shown in dotted line) are not present in all PV systems. PV system-utility interface is not found in standalone applications and the thermal subsystem is not found in small size applications. Each of these subsystems has its own components like DC cables, junction box, DC main switch, inverter, AC cables and meters. The PV system may have some external subsystems that can be connected to the PV system like DC loads, auxiliary power sources and AC loads. Figure 1.9 shows the external subsystems outside the PV system. The components of this system will be discussed in the following subsections.

1.3.1 Array Subsystem: Array Field

PV cell is the basic unit of the array field. It is the device that transforms the sun's photons directly into electricity. There are various types of PV cells made with different technologies available today. These types have various electrical and physical characteristics depending on the technologies used to manufacture them. A series connection of a small group of cells forms the PV sub-module. A connection of a larger number of cells forms a PV module which is the smallest complete

environmentally-protected assembly of PV cells and related components such as interconnects and mountings that accepts un-concentrated sunlight. Table 2.1 shows a comparison between different PV cell and module technologies in terms of efficiency.

A PV panel is one or more PV modules assembled, wired and designed to provide a field installable unit, while a PV array is the smallest installed assembly of PV panels or modules, support structures, foundations and other required components such as trackers. PV arrays can be connected in Series Parallel (SP), Total Cross Tied (TCT), Bridge Linked (BL) or Honey Comp (HC) style in order to get the required current and voltage ratings, as shown in Figure 1.10. PV arraysubfield contains one or more arrays with a distinguishing feature such as field geometry or electrical connection, while the PV field is the aggregation of all subfields. Figure 1.11 shows the different components of the array field.

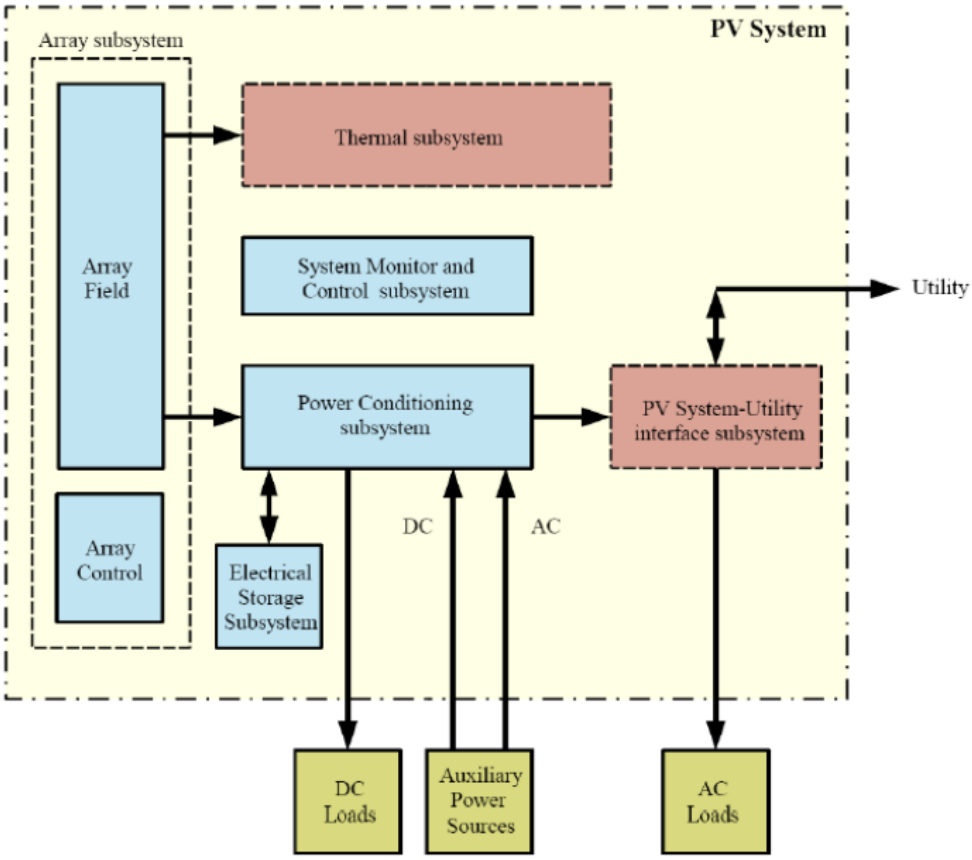

Figure 1.9: Block Diagram of general PV system

Table 1.1: Terrestrial cell and module efficiencies measured under STC*

Solar cell material	Cell efficiency (laboratory) (%)	Cell efficiency (production) (%)	Module efficiency (production) (%)
Mono-crystalline silicon	24.7	21.5	16.9
Polycrystalline silicon	20.3	16.5	14.2
Ribbon silicon	19.7	14	13.1
Crystalline thin- film silicon	19.2	9.5	7.9
Amorphous silicon	13	10.5	7.5
Micromorphous silicon	12	10.7	9.1
CIS	19.5	14	11
Cadmium telluride	16.5	10	9
III - V semiconductor	39	27.4	27
Dye-sensitized cell	12	7	5
Hybrid HIT solar cell	21	18.5	16.8

*STC stands for Standard Test Conditions.

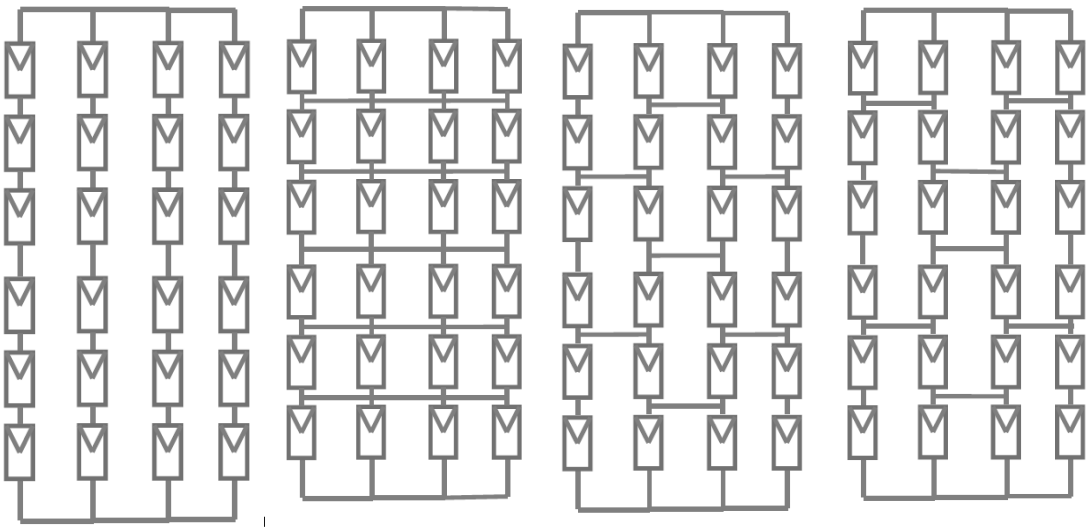

(a) (b) (c) (d)

Figure 1.10 : (a) 6 x 4 SP interconnection; (b) 6 x 4 TCT interconnection; (c) 6 x 4 BL interconnection; (d) 6 x 4 HC interconnection.

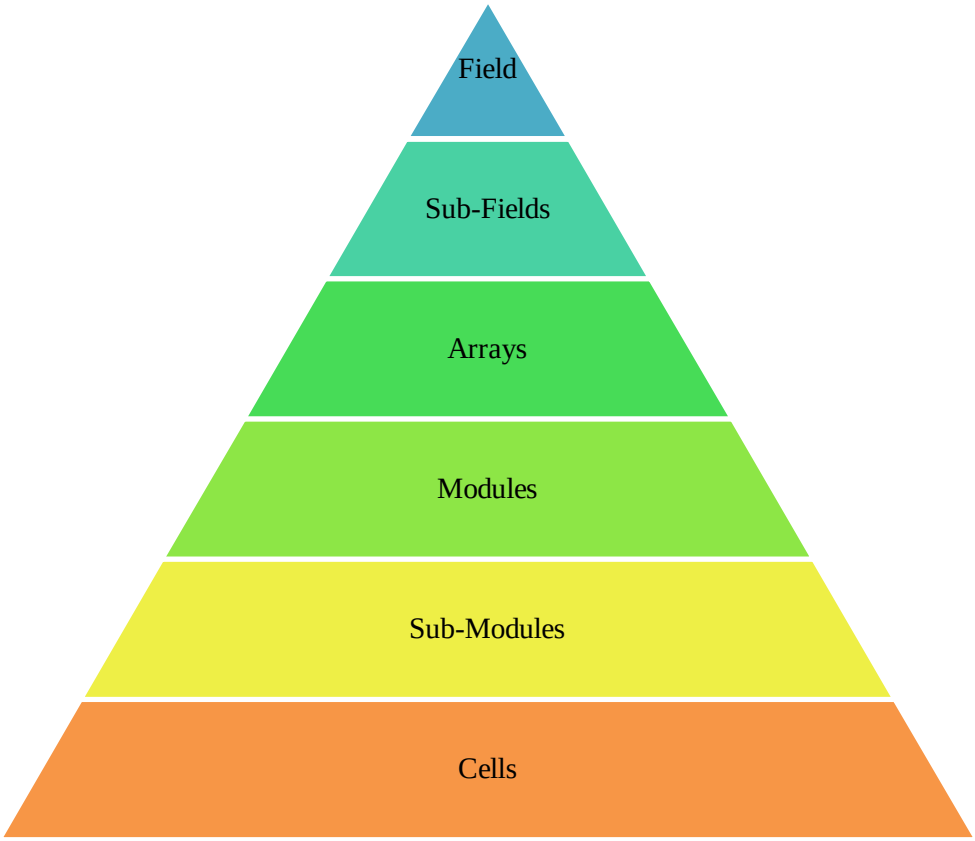

Figure 1.11: Decomposition of array field

1.3.2 Array Subsystem: Array Control

Array control means all electrical and mechanical controls that ensure proper electrical and thermal performances of the array field. This can be divided into array tracking modes and array cooling methods. Array tracking modes change the tilt angle of the array in order to track the sun. There are three tracking modes which are fixed, one-axis and two-axis, as described in Table 1.2. The cooling of PV arrays is important to operate at higher efficiencies and this could be achieved by passive (air) or forced (liquid) cooling.

Table 1.2: Array tracking modes

Mode	Description
Fixed	Fixed tilt angle from the horizontal, but can be adjusted several times throughout the year.
One-axis	Follows the sun from east to west throughout the day in one axis.
Two-axis	Follows the sun from east to west throughout the day in two axes.

1.3.3 Power Conditioning Subsystem

This subsystem converts the dc power from the array subsystem to dc or ac power that is compatible with system requirements. Its main components are Maximum Power Point Tracking (MPPT), DC-DC or/and DC-AC converter and controller. There are three main concepts for power conditioning subsystems, i.e., central, string and modular, as shown in Figure 1.12. Each of these subsystems has its own specifications and characteristics. Table 1.3 shows a comparison of these different concepts.

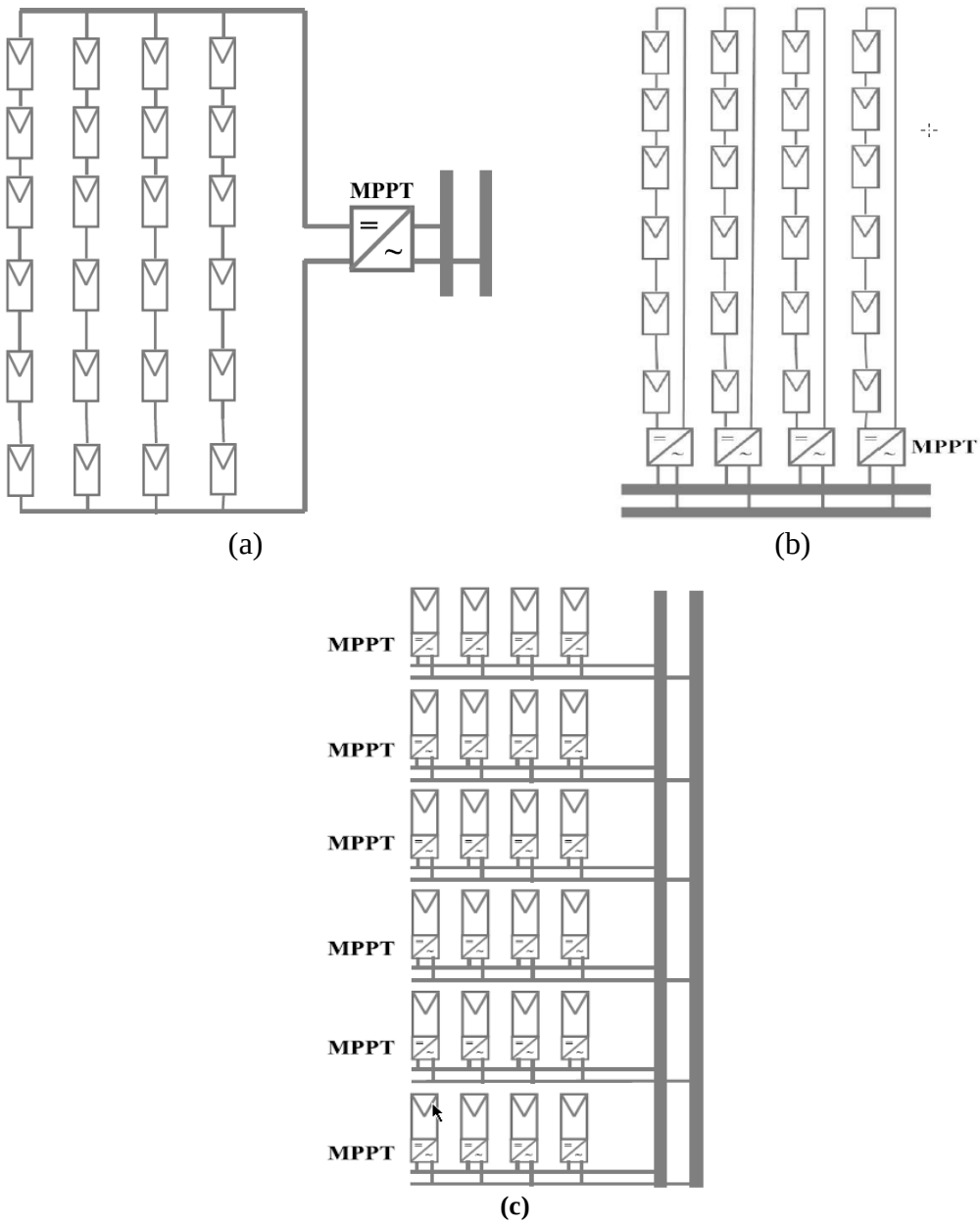

Figure 1.12: (a) Central inverter concept; (b) String inverter concept; (c) Modular inverter concept

Table 1.3: A comparison of different power conditioning concepts

	Central	String	Modular
DC voltage	High	High	Low
MPPT	Single	Multiple	Many
Partial Shading losses	Highest	High	Very little
String diodes	yes	No	No
Main DC cable	yes	No	No
DC cable junctions	yes	No	No
Inverter efficiency	Highest	Intermediate	lowest
Inverter monitoring	Easiest	Easy	Most difficult
Inverter thermalstress	Low	Low	Highest
Flexibility	Non-flexible	Flexible	Very flexible
Total cost	Higher	Lowest	Highest
Ratings	Up to several megawatts	Up to 3 kW/string	Up to 500 W/module

1.3.4 Energy Storage Subsystem

It is the sub-system that stores energy. Current technologies enable different means of energy storage. Common among these are: batteries, super-capacitors, fly wheels, and super-conducting magnetic energy storage.

1.3.5 System Monitoring and Control Subsystem

It is a logic and control circuitry that supervises the overall operation of the system by controlling the interaction between all subsystems. This system allows the detection of faults and failures of operation. There are three techniques to monitor the system: (i) Internet-based, (ii) web-based and (iii) presentation and visualization-based.

1.3.6 Thermal Subsystem

It is the sub-system that receives thermal energy from the array sub-system. The

thermal energy may be utilized for a thermal load application or dissipated. This subsystem could be found or not found in the PV system depending on the system size. The cooling is important for PV arrays in order to increase the efficiency and life time.

1.3.7 PV System Utility Interface Subsystem

It is the interconnection between the power conditioning subsystem, the on-site AC loads, and the utility. This system may include the AC cable and the protection equipment used to connect the inverter to the grid. This system is not found in standalone applications.

1.3.8 External Subsystems

A PV system can serve DC or AC loads and it can be connected to other power sources such as Distributed Energy Resources (DER).

1.4 PERFORMANCE PARAMETERS OF PV CELLS

Performance parameters of PV cells allow comparison of different types of cells. These parameters are calculated at Standard Test Conditions (STC) according to IEC standard 60904. This standard defines STC as follows:

1. Vertical irradiance of 1000 W/m^2.
2. Cell temperature of 25ºC with a tolerance of ± 2ºC.
3. Defined light spectrum according to IEC 60904-3 with an air mass of AM=1.5.

The performance parameters are as follows:

1. ***Maximum Power Point (MPP)*** which is the point on the I-V characteristic at which the solar cell works at maximum power.
2. ***MPP Voltage and current (V_{MPP}, I_{MPP}):*** the voltage and current at MPP.
3. ***Short circuit current (I_{SC}):*** the current at zero output voltage.
4. ***Open circuit current (V_{OC}):*** the voltage at zero output current.

5. ***Fill Factor (FF)*** which describes the quality of the solar cell by dividing the MPP by the product of open circuit voltage and short circuit current, as in Equation (2.1). This factor is affected by the values of series and shunt resistances.

$$FF = \frac{MPP}{V_{OC} X I_{SC}} \% \quad (1)$$

6. ***Efficiency (η)*** is the percentage of power converted from light to electricity, as in Equation (2.2), where I_r is the irradiance at STC and A_c is the surface area of the solar cell.

$$\eta = \frac{MPP}{I_r X A_C} x100 \quad (2)$$

1.5 PV SYSTEM PERFORMANCE PARAMETERS

PV systems have performance parameters developed by International Energy Agency, Photovoltaic Power Systems Program and described in the IEC standard 61724. These parameters are used to detect operational problems, compare different PV systems which differ in technology, design or geographic location, validate models for system performance estimation during the design process (B. Marion *et al.*, 2005). These parameters are:

1. *Final PV system yield (Yf)* which is defined as the net energy output (E) in kWh divided by the name plate dc power P_{dc} in kW of the PV system, as shown in Equation (3). Its unit is kWh/kW or hours. Y_f represents the number of hours the PV system would operate at the rated power to provide the same amount of energy. Y_f normalizes the energy production with respect to the system size, thus allowing the comparison of systems of different sizes but at the same solar resource conditions.

$$Y_f = \frac{E}{P_{dc}} \quad (3)$$

2. *Reference solar resource yield (Y_r)* which is defined as the total in-plane irradiance (H) in kWh/m^2 divided by the reference irradiance (G) in kW/m^2, as in Equation (4). Its unit is kWh/kW or hours. Y_r represents how many

hours the PV system should operate at reference irradiance G to give the same in-plane irradiance H. Y_r normalizes the solar radiation source and allows comparison of different solar sources. It is a function of the location, orientation of PV arrays and weather variability.

$$Y_r = \frac{H}{G} \tag{4}$$

3. *Performance Ratio (PR)* which is defined as the final yield (Y_f) divided by the reference yield (Y_r), as in Equation (5). It quantifies the overall effect of losses on the rated output power, and allows comparison of systems of different sizes under different solar resource conditions. These losses could be due to inverter inefficiency, wiring, mismatch, converting from DC to AC, module temperature, irradiance reflection, partial shading, system down time and component failure (Ueda Y. *et al.*, 2006). PR can be calculated on weekly, monthly or yearly basis. For example, if it is calculated on a weekly basis, it can indicate component failure or systemdown time; if it is calculated on a monthly basis, it can indicate seasonal temperature variations; and if it is calculated on a yearly basis, it can indicate a permanent decrease in the performance. Typically, the PR is in the range of 0.6 to 0.8, but it can be less in certain periods within the year.

$$PR = \frac{Y_f}{Y_r} \tag{5}$$

1.6 MISMATCH LOSSES

Mismatch losses in PV arrays can be caused by internal sources such as manufacturing tolerance and aging, or by external sources such as partial shading. Partial shading can be caused by easy-to-predict sources such as nearby trees and arrays, and difficult-to-predicted sources such as snow, dust and clouds. Mismatch losses could be reduced by either passive or active techniques. Passive techniques use passive elements such as bypass diodes while active techniques use active elements such as solid-state switches. The most common passive technique uses bypass diodes across PV modules to reduce partial shading losses (S. Silvestre*et al.*, 2009). These diodes protect the modules from local heating (hot spots) and increase

the overall power generation from the array under partial shading conditions. However, theses diodes do not allow the array to produce the maximum possible power under partial shading. Moreover, they increase the complexity of MPPT by creating multiple local maxima in the array's P-V characteristic (Patel H*et al.*, 2008). Another passive technique is based on changing PV array interconnections. PV arrays can be interconnected in Series Parallel (SP), Total Cross Tied (TCT), Bridge Linked (BL) or Honey Comb (HC) style in order to get the required current and voltage ratings. In SP interconnection, modules are connected in series forming strings; then, theses strings are connected in parallel. However, in TCT interconnection, the modules are connected in parallel; then, these parallel circuits are connected in series. BL and HC could be seen as interconnections somewhere in-between the two extreme cases of SP and TCT.

TCT, BL and HC reduce mismatch losses from partial shading when compared to SP (Kaushika N.D. *et al.,* 2003). However, the reduction is higher in case of TCTinterconnection than that in case of BL or HC. The authors developed an algorithm to select the best interconnection among SP, TCT, BL and HC for certain shading situations. They found TCT to be the best interconnection for almost all partial shading situations. Partial shading affects the modules' short circuit currents, thus affecting the modules' output currents at their MPPs. This leads to lack of coherence between modules' MPPs and array's MPP. In the case of SP, this issue is more severe than that in case ofTCT. The reason is that SP has a higher number of series strings than TCT. Also, TCT interconnection reduces the possibility of turning the bypass diodes ON, thus reducing the corresponding losses. When it comes to manufacturing tolerance mismatch, TCT can indeed reduce mismatch losses when compared to SP (Picault D *et al.*, 2010). However, these losses are now falling below 1 % due to technological advances. Theoretical studies on reliability of PV arrays show that TCT interconnection is more reliable than SP and is capable of doubling the operational lifetime of the array. The reason is that TCT has more parallel circuits than SP. The manufacturing cost of TCT-connected modules has been investigated. The investigation shows that there is no reason for TCT-connected modules to have a higher cost than SP-connected modules in mass production.

Active techniques for reducing partial shading losses could be grouped into three categories: (i) Distributed Power Electronics; (ii) Multi-level inverters; and (iii) PV array reconfiguration. In distributed power electronics, each module or group of modules has its own MPPT, thus avoiding partial shading losses caused by the incoherence between the modules. Also, this technique avoids the installation of bypass diodes, thus avoiding the corresponding losses. Moreover, the MPPT detection is easier and does not require complicated algorithms. However, this technique requires additional components for each module or group of modules, such as DC-DC or DC-AC converters. Moreover, it suffers from module level partial shading and requires complicated control architectures (Femia *et al.*, 2008). Multi-level inverter topologies such as diode-clamped, capacitor clamped and cascaded H-bridge have been used to reduce partial shading losses by independent voltage control of each module. These inverters reduce the device voltage stress as well as the ac output voltage harmonics. However, they require a complicated control algorithm to achieve operation at the optimal power point and they suffer from module-level and array-level partial shading.

The reconfigurable PV array was first proposed by Salameh *et al.* to start and operate permanent magnet dc motor coupled to volumetric water pump. Then, it was proposed to start and accelerate electric cars using a number of PV modules. Sherif and Boutros proposed a reconfiguration scheme for PV modules using transistors as switches between cells. Nguyen and Lehman used reconfiguration inside PV arrays and proposed two reconfiguration algorithms. However, they did not propose any mathematical formulation for the optimal reconfiguration. They also proposed dividing the PV array into fixed and adaptive parts with a switching matrix between them. They used one column only as an adaptive part in order to reduce the number of required sensors and switches, which when high can make the scheme ineffective if the shaded area is large.Moreover, they did not mention the necessary modifications in their algorithms to deal with higher number of reconfigurable columns. They tested the system under constant resistive load without MPPT. Velasco et al. used reconfiguration for grid connected PV arrays and proposed a mathematical formulation for it. However, the formulation was for a fully reconfigurable array only and did not indicate directly the global optimal

reconfiguration. Moreover, they proposed the irradiance equalization index as the difference between the maximum and the minimum average row irradiance levels in the array. They claimed that minimization of this index could result in an optimal reconfiguration. However, optimal reconfiguration requires that all the differences between row irradiance levels are minimized, as will be shown in this chapter. They proposed a solution algorithm that required an off-line determination of all possible configurations of the PV modules. Then, the best configuration for the current shading condition was found on-line. They tested the system using six PV modules and identified 15 possible configurations. Also, they found that nine PV modules will have 280 possible configurations. The number of possible configurations will increase for larger PV arrays, making it very difficult to find the optimal configuration in a timely manner. It can be concluded that the algorithm proposed (Velasco-Quesada *et al*., 2009) is more suitable for small number of PV modules.

1.7 SUMMARY

This chapter gave a brief literature survey of Photovoltaic system and its subsystems. Also, the performance parameters for photovoltaic cell and systems and mismatch losses were introduced.

1.8 THESIS OBJECTIVES

The main focus of the thesis is to develop new designs for PV arrays to overcome partial shading. The objectives of this thesis are as follows:

1. Literature survey, technology review & development of mathematical model of photovoltaic array.

2. To develop optimal photovoltaic array patterns to reduce losses under partial shading.

3. To investigate the performance of the developed system using MATLAB based simulation software

1.9 THESIS OUTLINE

The remainder of this thesis is structured as follows:

Chapter 2 gives a literature survey on the photovoltaic systems.

Chapter 3 gives the methodology for photovoltaic array modeling.

Chapter 4 presents the formulation for the optimal total-cross-tied interconnection for photovoltaic arrays.

Chapter 5 presents the formulation for optimal photovoltaic arrayreconfiguration.

Chapter 6 makes some conclusions based on the contents of the thesis.

CHAPTER 2

LITERATURE OF REVIEW

The main building block of a photovoltaic array is called the photovoltaic cell constituting of a simple p-n semiconductor junction. The general operation of a PV cell is a response to a specific range of solar radiation hitting the cell thus producing a current and an EMF at the terminals of the cell. The first PV cell produced by Chapin, Fuller and Pearson had an efficiency of 6% in 1954. The maximum efficiency available is still around 17%. Also, an average efficiency of 12% is considered for several PV designs related to several applications. Regarding the cost of PV cells, that the cost is around 1.5 €/Watt (around 2 $/Watt) for PV modules and around 3 €/Watt (around 4$/Watt) for PV systems including controls and converters. The performance of a photovoltaic (PV) array is affected by temperature, solar isolation, shading, and array configuration. Often, the PV arrays get shadowed, completely or partially, by the passing clouds, neighboring buildings and towers, trees, and utility and telephone poles. The situation is of particular interest in case of large PV installations such as those used in distributed power generation schemes. Under partially shaded conditions, the PV characteristics get more complex with multiple peaks. Yet, it is very important to understand and predict them in order to extract the maximum possible power.

Alex Joseph *et al.* investigated photovoltaic panelarray characteristics by considering partial shading effects andmodeling of perturb and observed MPPT (Maximum Power Point Tracking) algorithm applied boost convertor using MATLAB/Simulink. Performance of a photovoltaic (PV) array is affected by temperature, solar insolation, shading and array configuration. Analysis of photovoltaic array characteristics plays an important role in developing an algorithm based devices for Maximum power point tracking (MPPT). Such devices play an important role in efficient usage of available solar energy. The analyzer developed in command window reads panel temperature, irradiance and number of cells exposed to light and generates corresponding PV characteristics. Maximum power point tracking algorithm is used to generate pulse width modulated signal for boost convertor thus extracting the maximum power from the solar PV module and transferring that power to the load.

Ali Bidram*et al.* (2012) proposed that partial shading in photovoltaic (PV) arrays rendersconventional maximum power point tracking (MPPT) techniques ineffective. The reduced efficiency of shaded PV arrays is a significant obstacle in the rapid growth of the solar power systems. Thus, addressing the output power mismatch and partial shading effects is of paramount value. Extracting the maximum power of partially shaded PV arrays has been widely investigated in the literature. The proposed solutions can be categorized into four main groups. The first group includes modified MPPT techniques that properly detect the global MPP. They include power curve slope, load-line MPPT, dividing rectangles techniques, the power increment technique, instantaneous operating power optimization, Fibonacci search, neural networks, and particle swarm optimization. The second category includes different array configurations for interconnecting PV modules, namely series–parallel, total-crosstie, and bridge-link configurations. The third category includes different PV system architectures, namely centralized architecture, series-connected microconverters, parallel-connected microconverters, and microinverters. The fourth category includes different converter topologies, namely multilevel converters, voltage injection circuits, generation control circuits, module-integrated converters, and multiple-input converters.

Ali S. Masoum*et al.* (2010) presented detailed theoretical analyses to show theinfluence of partial shading on v-i and p-i characteristics of solar modules and to compare the accuracies of two simple, fast and reliable maximum power-point tracking (MPPT) techniques for photovoltaic (PV) systems: the voltage-based (VMPPT) and the current-based (CMPPT) approaches. Simulations were presented to highlight impacts of partial shading on MPPT of individual and series connected solar cells without and with the bypass diodes. A modified CMPPT approach was proposed to integrate partial shading.

Anssi Maki *et al.* (2013) investigated that partial shading of photovoltaic (PV) power generators causes typically multiple maximum power points (MPPs) on the electrical characteristics of the generators. The effect of partial shading on the number of MPPs has been studied by using MATLAB Simulink simulation models of a real PV generator composed of 18 series-connected PV modules. In most cases, partial shading conditions lead to the occurrence of multiple MPPs, but also only

one MPP can be present despite of the partial shading. Conditions, which lead to one or multiple MPPs in electrical characteristics of PV generators, have been studied systematically. It was found out that reasons for having one or more MPPs originated directly from physical properties of PV modules: the ratio of MPP current to short-circuit current, power losses in bypass diodes, and the value of the parasitic shunt resistance of PV cells.

B. Indu Rani *et al.* (2013) investigated that partial shading of PV arrays reduces the energy yieldof PV systems and the arrays exhibit multiple peaks in the P-V characteristics. The losses due to partial shading are not proportional to the shaded area but depend on the shading pattern, array configuration and the physical location of shaded modules in the array. They presented a technique to configure the modules in the array so as to enhance the generated power from the array under partial shading conditions. In this approach, the physical location of the modules in a Total Cross Tied (TCT) connected PV array are arranged based on the Su Do Ku puzzle pattern so as to distribute the shading effect over the entire array. Further, this arrangement of modules was done without altering the electrical connection of the modules in the array. The Su Do Ku arrangement reduces the effect of shading of modules in any row thereby enhancing the generated PV power. The performance of the system was investigated for different shading patterns and the results show that positioning the modules of the array according to “Su Do Ku” puzzle pattern yields improved performance under partially shaded conditions.

B. Indu Rani *et al.* (2013) proposed that partial shading of PV arrays reduces the energy yieldof PV systems and the arrays exhibit multiple peaks in the P-V characteristics. The losses due to partial shading are not proportional to the shaded area but depend on the shading pattern, array configuration and the physical location of shaded modules in the array. They presented a technique to configure the modules in the array so as to enhance the generated power from the array under partial shading conditions. In this approach, the physical location of the modules in a Total Cross Tied (TCT) connected PV array were arranged based on the Su Do Ku puzzle pattern so as to distribute the shading effect over the entire array. Further, this arrangement of modules was done without altering the electrical connection of the modules in the array. The Su Do Ku arrangement reduces the effect of shading of

modules in any row thereby enhancing the generated PV power. The performance of the system was investigated for different shading patterns and the results show that positioning the modules of the array according to “Su Do Ku” puzzle pattern yields improved performance under partially shaded conditions.

B.Patnaik *et al.* (2011) investigated that performance of a solar photovoltaic (SPV) array is affected by variations in temperature, solar insolation and array configuration. At times, the SPV arrays are susceptible to non-uniform illumination due to shading caused by passing cloud, towers, trees etc. The effect of partial shading is critical; it can cause problems such as irregular P-V characteristics (multiple peaks) which makes power optimization difficult by the conventional power extraction techniques and results in significant loss of power. In most SPV systems, a DC-DC converter is connected at the SPV output to compensate for the drop in the PV output voltage. Under shaded conditions, a high gain DC-DC converter is needed to boost the low SPV voltage, which leads to additional power loss. Under such conditions, an appropriate reconfiguration scheme may prove to be beneficial as it ensures a certain minimum voltage for the next stage, obviating the need for high voltage gain, thereby reducing the power losses in the DCDC converter. Under non-uniform illumination conditions, the P-V characteristics may exhibit multiple peaks. In the absence of reconfiguration, the conventional power optimization technique will get trapped at the local maxima and result in loss of power. While reconfiguration shows advantage in power as well as makes the P-V characteristics less irregular making the convergence to the maximum power point easier. They proposed a reconfiguration strategy which ensures a certain minimum deviation from the operating voltage with improvement in power.

Bader N. Alajmi *et al.* (2013) developed a modified fuzzy-logic controller for maximumpower point (MPP) tracking to increase photovoltaic (PV) system performance during partially shaded conditions. Instead of perturbing and observing the PV system MPP, the controller scans and stores the maximum power during the perturbing and observing procedures. The controller offers accurate convergence to the global maximum operating point under different partial shadowing conditions. A mathematical model of the PV system under partial shadowing conditions was derived.

Bidram *et al.* (October 2012) proposed different approaches in each category and provided a brief discussion of their characteristics to analyze and mitigate partial shading in photovoltaic (PV) arrays .The reduced efficiency of shaded PV arrays is a significant obstacle in the rapid growth of the solar power systems. Thus, addressing the output power mismatch and partial shading effects is of paramount value. Extracting the maximum power of partially shaded PV arrays was widely investigated in the literature. The proposed solutions can be categorized into four main groups. The first group included modified MPPT techniques that properly detect the global MPP. They include power curve slope, load-line MPPT, dividing rectangles techniques, the power increment technique, instantaneous operating power optimization, Fibonacci search, neural networks, and particle swarm optimization. The second category included different array configurations for interconnecting PV modules, namely series–parallel, total-crosstie, and bridge-link configurations. The third category included different PV system architectures, namely centralized architecture, series-connected micro converters, parallel-connected micro converters, and micro inverters. The fourth category included different converter topologies, namely multilevel converters, voltage injection circuits, generation control circuits, module-integrated converters, and multiple-input converters.

Chee Lim Nge *et al.* (2011) investigated that the occurrence of multiple local maxima due topartial shading conditions poses a challenge to MPPT techniques. Scanning approach is able to search for global MPPs but incurs power loss during the scanning. They presented a strategy that reduces the scanning period by skipping parts of the voltage range. The operating principle is based on the simplified analysis of the PV characteristics. In order to account for rapidly changing atmospheric conditions, real-time MPPT technique was employed between the scanning intervals. Boost converter was developed to experimentally verify the proposed MPPT method under various partial shading conditions.

Cheng (2010) proposed a self-adaptive reconfiguration method based on fuzzy control, how to apply it to the photovoltaic power generation systems and explained why fuzzy control based on the shading degree of PV arrays can quickly respond to the changes of external environments. The experimental results showed that when

the partial shade phenomenon occurs, changing the connections of the solar PV sub modules using switching matrix can quickly reduce the loss of output power.

Chris Deline (2011) developed site survey data for several residential installations, showing the extent and frequency of shade throughout the year. This background information was used to design a representative shading test that is conducted on two sideby- side 8-kW photovoltaic (PV) installations. One system is equipped with a standard string inverter, while the other is equipped with microinverters on each solar panel. Partial shade is applied to both systems in a comprehensive range of shading conditions, simulating one of three shade extents. Under light shading conditions, the microinverter system produced the equivalent of 4% annual performance improvement, relative to the string inverter system. Under moderate shading conditions, the microinverter system outperformed the string inverter system by 8%, and under heavy shading the microinverter increased relative performance by 12%. In all three cases, the percentage of performance loss that is recovered by the use of distributed power electronics is 40%-50%. Additionally, it was found that certain shading conditions can lead to additional losses in string inverters due to peak-power tracking errors and voltage limitations

Dzung D. Nguyen *et al.* (2009) proposed a neural network based approach toestimating the maximum possible output power of a solar photovoltaic array under the non-uniform shadow conditions at a given geographic location. Taking the solar irradiation levels, the ambient temperature, and the Sun's position angles as inputs, a multilayer feed-forward neural network estimates the output power of the solar photovoltaic array. Training data for the neural network is generated by conducting a series of experiments on a shaded solar panel at different hours of a day for several days. After training the neural network, its accuracy and generalization properties are verified on test data. It is found that the neural network, which is an approximation of the actual shading function, is able to estimate the maximum possible output power of the solar PV arrays accurately. Further, the network was able to estimate the maximum output power for field data and gives rise to the possibility that the proposed approach can be used for making decision regarding the installation of solar PV arrays in the field.

Dzung Nguyen *et al.* (2008) proposed an adaptive reconfigurationscheme to reduce the effect of shadows on solar panels. A switching matrix connects a solar adaptive bank to a fixed part of a solar PV array, according to a model based control algorithm that increases the power output of the solar PV array. Control algorithms are implemented in real-time.

Efstratios I. Batzelis *et al.* (2014) investigated a reformulation of the widely used one diode model of the photovoltaic (PV) cell is introduced, employing the Lambert function. This leads to an efficient PV string model, where the terminal voltage is expressed as an explicit function of the current, resulting in significantly reduced calculation times and improved robustness of simulation.Various shading patterns were investigated to outline the effect on the string and characteristics. Simplified formulae were then derived to calculate the maximum power points of a PV string operating under any number of irradiance levels, without resorting to detailed modeling and simulation.

Efstratios I. Batzelis *et al.* (2014)proposed a reformulation of the widely used one diodemodel of the photovoltaic (PV) cell, employing the Lambert function. This leads to an efficient PV string model, where the terminal voltage is expressed as an explicit function of the current, resulting in significantly reduced calculation times and improved robustness of simulation. The model was experimentally validated and then used for studying the operation of PV strings under partial shading conditions. Various shading patterns are investigated to outline the effect on the string and characteristics. Simplified formulae were derived to calculate the maximum power points of a PV string operating under any number of irradiance levels, without resorting to detailed modeling and simulation. Both the explicit model and the simplified expressions are intended for application in shading loss and energy yield calculations.

Eftichios Koutroulis *et al.* (2012) presented the power–voltage characteristic of photovoltaic(PV) arrays operating under partial-shading conditions exhibits multiple local maximum power points (MPPs). A new method to track the global MPP is presented, which is based on controlling a dc/dc converter connected at the PV array output, such that it behaves as a constant input-power load. The proposed method

has the advantage that it can be applied in either standalone or grid-connected PV systems comprising PV arrays with unknown electrical characteristics and does not require knowledge about the PV modules configuration within the PV array.

El-Dein *et al.* (2013) proposed a novel mathematical formulation for the optimal reconfiguration of photovoltaic arrays to minimize partial shading losses. Partial shading causes mismatch between the modules, leading to undesirable effects such as reduction in generated power and hot spots. The severity of these effects was considerably reduced by photovoltaic array reconfiguration. He formulated the reconfiguration problem as a mixed integer quadratic programming problem and found the optimal solution using a branch and bound algorithm. The proposed formulation can be used for an equal or no equal number of modules per row. Moreover, it can be used for fully reconfigurable or partially reconfigurable arrays. The improved results from the reconfiguration were demonstrated by extensive simulation results.

Engin Karatepe *et al.* (2008) investigated that the partially shaded photovoltaic (PV) modules typically exhibit additional difficulties in tracking the maximum power point since their power–voltage characteristics are complex and may have multiple local maxima. For this reason, conventional techniques fail to track the maximum power point effectively if the PV array is partially shaded or some of its cells are damaged. This paper presents a novel power compensation system for PV arrays for complicated non-uniform insolation conditions. The proposed system is based on recovering the power of non-shaded PV modules into the system again completely by forward biasing a bypass diode of the shaded PV modules. The proposed system uses dc–dc converters equipped with each PV string in the PV array. For identifying which shaded PV modules should be deactivated, the operating voltage of the PV modules are monitored and compared. The proposed system enables the non-shaded PV modules to operate effectively at their normal maximum power point. The effectiveness of the proposed system is investigated and confirmed for complicated partially shaded PV arrays.

Evagelia V. Paraskevadaki*et al.* (2011) proposed that photovoltaic (PV) system performance is influencedby several factors, including irradiance, temperature,

shading, degradation, mismatch losses, soiling, etc. Shading of a PV array, in particular, either complete or partial, can have a significant impact on its power output and energy yield, depending on array configuration, shading pattern, and the bypass diodes incorporated in the PV modules. The effect of partial shading on multicrystal line silicon (mc-Si) PV modules was investigated. A PV module simulation model implemented in P-Spice is first employed to quantify the effect of partial shading on the I–V curve and the maximum power point (MPP) voltage and power. Then, generalized formulae was derived, which permit accurate enough evaluation of MPP voltage and power of mc-Si PV modules, without the need to resort to detailed modeling and simulation.

F.Z. Hamidon*et al.*analysed that photovoltaic (PV) arrays are used in many terrestrialapplications. It exhibits a non-linear i-v characteristic which electrical energy production is depending on typical conditions such as solar irradiance and temperature. For best utilizations, the PV arrays must be operated at their maximum power point (MPP) via good implementation of Maximum Power Point Tracking (MPPT) algorithm technique. It is important to be aware that the MPP varies with respect to the characteristic of PV arrays in various conditions as mentioned above. Adetailed simulation model of PV array by employing the most popular MPPT algorithm of Perturb & Observe (P&O) has been developed in MATLAB. This model allows characterizing the PV array in terms of different temperature and irradiance as variable parameters.

Gao *et al.* (2009) proposed a portable solar PV system that maximizes the power generated by every PV cell in the PV panel. The proposed configuration consists of an array of parallel-connected PV cells, a low-input-voltage step-up power converter, and a simple wide bandwidth MPP tracker. Parallel-configured PV systems were compared to traditional series-configured PV systems through both hardware experiments and computer simulations. Study results showed that, under complex irradiance conditions, the power generated by the new configuration was approximately twice that of the traditional configuration. The solar PV system can be widely used in many consumer applications, such as PV vests for cell phones and music players.

Hadi El-helw *et al.*(2013) investigated different photovoltaic arrayconfigurations and their effect on the PV array efficiency, while applying the maximum power point tracking (MPPT) for better utilization of the overall system. There are several MPPT and several arrangements of the PV modules inside the array. Among several studied MPPT algorithms for PV panels, the Perturb and Observe (P&O) method is utilized as the simplest and the easiest to be practically implemented. The PV module has been modeledand the MPPT algorithm has been validated by simulation analysis and experimental implementation using microcontroller and power electronics converter. Different arrangements of the PV array were discussed, and a comparison study between the central inverter configuration and the multi-string configuration is conducted.

Hamid Reza Mohajeri *et al.* (2012) presented a newalgorithm to track global MPP under partially shaded condition. The algorithm acts by a heuristic search of array voltage to find global MPP. In the process of heuristic search reference voltage of PV output is generated and used for perturbation. After each perturbing, results are used for better search, until achieving the convergence constraint. To check the accuracy and precision of the method an accurate model of PV array was implemented in MATLAB software and various tests were conducted.

Hamidreza Ghoddami *et al.* (2012) proposed a two-stage photovoltaic (PV) system for large-scale grid-connected applications. The proposedPV system consists of multiple dc-dc boost converters and one large inverter. The inverter is based on the neutral-point clamped (NPC) technology with a grounded dc-link midpoint. This enables a bipolar structure and doubles the net dc voltage, while the 600- V North American standard is respected. The boost converters independently control the dc voltages of their corresponding PV arrays, while their output voltages are regulated by the inverter. Further, they limit the dc-link voltage of the inverter if the power cannot be dispatched to the grid, for example, due to network faults or failure of the inverter. The proposed PV system also offers an enhanced MPPT performance and energy yield, due to its multi-MPPT capability. The NPC technology permits the employment of low-voltage switches for the inverter, despite the doubled net dc voltage.

Hesan Ziar *et al.* (2014) investigated the problem of overcurrentoccurrence due to partial shading in photovoltaic (PV) modules with overlapped by-pass diodes. Although this configuration is less common in the photovoltaicmodule industry, but it behaves unusually and interestingly at partial shading. These types of modules produce over current at some shading profiles. In this paper, the possibility of overcurrent occurrence is estimated for photovoltaic modules and arrays. The maximum value of overcurrent is also calculated. The theoretical outcomes are verified by experimental results. The results can be used as a suggestion for appropriate wiring system selection.

Hiren Patel *et al.* (2008) investigated that the performance of a photovoltaic (PV) array isaffected by temperature, solar insolation, shading, and arrayconfiguration. Often, the PV arrays get shadowed, completely orpartially, by the passing clouds, neighboring buildings and towers,trees, and utility and telephone poles. The situation is of particularinterest in case of large PV installations such as those used in distributed power generation schemes. Under partially shaded conditions, the PV characteristics get more complex with multiple peaks. Yet, it is very important to understand and predict them in order to extract the maximum possible power. They presented a MATLAB-based modeling and simulation scheme suitable for studying the I–V and P–V characteristics of a PV array under a non uniform insolation due to partial shading. It can also be used for developing and evaluating new maximum power point tracking techniques, especially for partially shaded conditions. The proposed models conveniently interface with the models of power electronic converters, which is a very useful feature. It can also be used as a tool to study the effects of shading patterns on PV panels having different configurations. It is observed that, for a given number of PV modules, the array configuration (how many modules in series and how many in parallel) significantly affects the maximum available power under partially shaded conditions.

Hiroshi Nagayoshi *et al.* (2005) proposed a partial shading effect simulation using multi small-scale PV module simulator units. The simulator circuit used in the module simulator magnifies an I-V output of a pn photo-sensor using analog technique. A grand line of each module simulator unit is separated each other, hence any topology of connections are available. Synthesized output characteristics in

series and parallel connection of the module simulator units were examined. The each simulator circuit is simple compare to the conventional methods and complex I-V characteristics of PV array by partial shading could easily be emulated.

Hiroshi Nagayoshi *et al.* (2005) proposed partial shading effect simulation using multi small-scale PV module simulator units is demonstrated. The simulator circuit used in the module simulator magnifies an I-V output of a pn photo-sensor using analog technique. A grand line of each module simulator unit is separated each other, hence any topology of connections are available. Synthesized output characteristics in series and parallel connection of the module simulator units were examined. The each simulator circuit is simple compare to the conventional methods and complex I-V characteristics of PV array by partial shading could easily be emulated.

IPokkrong Vongkoon *et al.* (2012) developed a photovoltaic (PV) array simulator using a classicaldc/dc buck converter as power stage. The inductor current of the converter is used as control variable that is characterized by digital R-S-T controller, so the converter can emulate accurately the V-I curve, even under partial shading condition. Fundamental of controller design was presented with the technique of canceling discrete zero of plant. The details of PV array model were also investigated in order to prepare an appropriated current loop command signal.

Jenifer *et al.* (2012) presented the mathematical model for a photovoltaic array. It has been developed with the help of MATLAB/Simulink software package. Since the PV module has nonlinear characteristics, it is necessary to model it for the design and simulation of maximum power point tracking (MPPT) for PV system applications, and to study the dynamic analysis of converters. This model of photovoltaic array is user-friendly. The developed model is simulated and analyzed in conjunction with power electronics, for a maximum power point tracker.

KashifIshaque *et al.* (2012) proposed an improved maximum powerpoint tracking (MPPT) method for the photovoltaic (PV) system using a modified particle swarm optimization (PSO) algorithm. The main advantage of the method is the reduction of the steadystate oscillation (to practically zero) once the maximum power point (MPP) is located. Furthermore, the proposed method has the ability to track the MPP

for the extreme environmental condition, e.g., large fluctuations of insolation and partial shading condition. The algorithm is simple and can be computed very rapidly; thus, its implementation using a low-cost microcontroller is possible. To evaluate the effectiveness of the proposed method, MATLAB simulations are carried out under very challenging conditions, namely step changes in irradiance, step changes in load, and partial shading of the PV array. Its performance is compared with the conventional Hill Climbing (HC) method. Finally, an experimental rig that comprises of a buck–boost converter fed by a custom-designed solar array simulator is set up to emulate the simulation. The software development is carried out in the space 1104 environment using a TMS320F240 digital signal processor.

KashifIshaque *et al.* (2012) proposed an improved maximum power point tracking (MPPT) method for the photovoltaic (PV) system using a modified particle swarm optimization (PSO) algorithm. The main advantage of the method is the reduction of the steady state oscillation (to practically zero) once the maximum power point (MPP) is located. Furthermore, the proposed method has the ability to track the MPP for the extreme environmental condition, e.g., large fluctuations of insolation and partial shading condition. The algorithm is simple and can be computed very rapidly; thus, its implementation using a low-cost microcontroller is possible. To evaluate the effectiveness of the proposed method, MATLAB simulations were carried out under very challenging conditions, namely step changes in irradiance, step changes in load, and partial shading of the PV array. Its performance were compared with the conventional Hill Climbing (HC) method. Finally, an experimental rig that comprises of a buck–boost converter fed by a custom-designed solar array simulator was set up to emulate the simulation. The software development is carried out in the space 1104 environment using a TMS320F240 digital signal processor.

KashifIshaque *et al.* (2013) proposed a deterministic particle swarm optimization to improve the maximum power point tracking (MPPT) capability for photovoltaic system under partial shading condition. The main idea is to remove the random number in the accelerations factor of the conventional PSO velocity equation. Additionally, the maximum change in velocity is restricted to a particular value,

which is determined based on the critical study of P–V characteristics during partial shading. Advantages of the method include: 1) consistent solution is achieved despite a small number of particles, 2) only one parameter, i.e., the inertia weight, needs to be tuned, and 3) the MPPT structure is much simpler compared to the conventional PSO. To evaluate the idea, the algorithm is implemented on a buck-boost converter and compared to the conventional hill climbing (HC) MPPT method. Simulation results indicated that the proposed method outperforms the HC method in terms of global peak tracking speed and accuracy under various partial shading conditions. Furthermore, it is tested using the measured data of a tropical cloudy day, which includes rapid movement of the passing clouds and partial shading. Despite the wide fluctuations in array power, the average efficiency for the 10-h test profile reaches 99.5%.

Kinattingal Sundareswaran *et al.* (2014) proposed the development of a maximum power-point tracking (MPPT) method for photovoltaic (PV) systems under partially shaded conditions using firefly algorithm. The major advantages of the proposed method are simple computational steps, faster convergence, and its implementation on a lowcost microcontroller. The proposed scheme was studied for two different configurations of PV arrays under partial shaded conditions and its tracking performance is compared with traditional perturb and observe (P&O) method and particle swarm optimization (PSO) method under identical conditions. The improved performance of the algorithm in terms of tracking efficiency and tracking speed was validated.

Kinattingal Sundareswaran *et al.* (2014) proposed the development of a maximum power-point tracking (MPPT) method for photovoltaic (PV) systems under partially shaded conditions using firefly algorithm. The major advantages of the proposed method are simple computational steps, faster convergence, and its implementation on a lowcost microcontroller. The proposed scheme wss studied for two different configurations of PV arrays under partial shaded conditions and its tracking performance is compared with traditional perturb and observe (P&O) method and particle swarm optimization (PSO) method under identical conditions. The improved performance of the algorithm in terms of tracking efficiency and tracking speed was validated.

Kinattingal Sundareswaran *et al.* (2014) proposed the development of a maximum power-point tracking (MPPT) method for photovoltaic (PV) systems under partially shaded conditions using firefly algorithm. The major advantages of the proposed method are simple computational steps, faster convergence, and its implementation on a lowcost microcontroller. The proposed scheme is studied for two different configurations of PV arrays under partial shaded conditions and its tracking performance is compared with traditional perturb and observe (P&O) method and particle swarm optimization (PSO) method under identical conditions.

Kok Soon Teyet *et al.* (2013) proposed that under partial shading conditions, multiple peaks are observed in the power-voltage (P-V) characteristic curve of a PV array and the conventional Maximum Power Point Tracking (MPPT) algorithms may fail to track the Global Maximum Power Point (GMPP). Therefore, they proposed a modified Incremental Conductance (Inc Cond) algorithm which able to track the GMPP under partial shading conditions and also load variation. A novel algorithm was introduced to modulate the duty cycle of the DC-DC converter in order to ensure the fast MPPs tracking process. Simulation and hardware implementation were carried out to evaluate the effectiveness of the proposed algorithm under partial shading and load variation. The results showed that the proposed algorithm was able to track the GMPP accurately under different types of partial shading conditions and the response during variation of load and solar irradiation are faster than the conventional Inc Cond algorithm. Hence, the effectiveness of the proposed algorithm under partial shading condition and load variation was validated in this paper.

Koutroulis (2012) presented a new method to track the global MPP, which is based on controlling a dc/dc converter connected at the PV array output, such that it behaves as a constant input-power load. The proposed method had the advantage that it can be applied in either standalone or grid-connected PV systems comprising PV arrays with unknown electrical characteristics and do not require knowledge about the PV modules configuration within the PV array. The experimental results verified that the proposed global MPP method guarantees convergence to the global MPP under any partial shading conditions.

Lew Andrew *et al.* (2009) developed a photovoltaic arrayreconfiguration algorithm to maximize the power that an arraycan provide a load. The algorithm reconfigures the array suchthat each element of the array is operated at its maximum powerpoint. A switch topology was also designed to implement thealgorithm using the minimum number of switches. Twoparameters are used by the algorithm: array loaded voltage andtemperature. The algorithm is tested on reconfiguring an arrayof four photovoltaic panels. The performance of the photovoltaicmodules is studied with and without the switching algorithm.Simulations were also done to validate the performance of thesystem. Tests showed that for a constant resistance load, the algorithm can match the performance of other possibleconfigurations and introduce a significant improvement in the output power of the array. For the constant current load, it was noted that the array can supply the required current at aminimum irradiance while for a constant voltage load, the systemperformed better than any of the possible configurations.

Lijun Gao *et al.* (2009) investigated that solar photovoltaic (PV) arrays in portable applicationsare often subject to partial shading and rapid fluctuations of shading. In the usual series-connected wiring scheme, the residual energy generated by partially shaded cells either cannot be collected (if diode bypassed) or, worse, impedes collection of power from the remaining fully illuminated cells (if not bypassed). Rapid fluctuation of the shading pattern makes maximum power point (MPP) tracking difficult; generally, there will exist multiple local MPPs, and their values will change as rapidly as does the illumination. A portable solar PV system that effectively eliminates both of the aforementioned problems is described and proven. This system is capable of simultaneously maximizing the power generated by every PV cell in the PV panel. The proposed configuration consists of an array of parallel-connected PV cells, a low-input-voltage step-up power converter, and a simple wide bandwidthMPP tracker. Parallel-configured PV systems are compared to traditional series-configured PV systems through both hardware experiments and computer simulations in this paper. Study results demonstrated that, under complex irradiance conditions, the power generated by the new configuration is approximately twice that of the traditional configuration. The solar PV system can be widely used in many consumer applications, such as PV vests for cell phones and music players.

M. Z. Shams El-Dein *et al.*(2012) analysed that condition of having different irradiance levels among different photovoltaic modules in a photovoltaic array is called partial shading. Energy losses have been reported to occur due to partial shading. These losses could be reduced by reconnecting the modules of the array in such a way that the overall impact of partial shading on the array is reduced. He proposed a novel optimization model for the optimal total cross tied interconnection which significantly reduces partial shading losses. The improvement over ordinary total-cross-tied interconnection has been demonstrated by extensive simulation results.

Martin Hermie *et al.* (2008) proposed electrical shading losses due to recombination in the region of base bus bar and fingers using two-dimensional numerical device and network simulations. The base doping dependence of these effects is investigated as well as the influence of the rear side passivation. The results of the simulations were compared with EQE maps of back-junction solar cells. The influence of the busbars is quantified and the influence on the overall cell performance was discussed.

MasafumiMiyatake *et al.* proposed the MPPT employing line search algorithm with Fibonacci sequence. Finding maximum power point is difficult when a photovoltaic array is partially shaded, because two or more maximum power points may appear. In this paper, the authors improve the proposed method in order to find the global maximum under the partially shaded condition. The improved algorithm has good performance in many experiments. In addition, the authors also mention that the compensation of the large output fluctuation caused by the proposed MPPT by using B wind turbine generator as a kind of flywheel energy storage.

Md. Asiful Islam *et al.* (2010) proposed a generalized photovoltaic array simulation model inMATLAB/Simulink.The model includes PV module and array for easy use onsimulation platform. The proposed model is designed with a user friendly icon and a dialog box like Simulink block libraries. Thismakes the generalized PV model easily simulated and analyzedeven with a maximum power point tracker. Considering theeffect of solar irradiance and temperature change, the outputcurrent and voltage of PV modules are simulated and optimized using the proposed model.

The model was tested using a directly coupled dc load as well as an ac load via an inverter.

Miguel Carrasco *et al.* (2014) proposed that photovoltaic cells are characterized via a static relationship that describes their current-voltage relationship. This relationship is a complicated implicit algebraic equation that depends, in a nonlinear way, on two critical uncertain parameters: temperature and solar irradiance. The efficient operation of the panel relies on the knowledge of these key parameters. While it is technologically feasible to measure the former, a sensor for the latter is usually expensive and difficult to calibrate. They proposed a globally convergent estimator for solar irradiance which is developed using the principles of immersion and invariance recently reported in the control literature. To design the estimator, a suitable reparameterization of the current–voltage characteristic, which effectively exhibits a monotonic behavior was introduced.

Moballegh (2011) proposed an effective technique to model photovoltaic characteristics under various environmental circumstances including non-shaded and partially shaded conditions. The technique had been developed based on experimental study. It provided a versatile model using PSCAD which can represent any form of PV array with any configuration of bypass diodes. The impact of various partially shaded conditions as well as different temperature and solar irradiance levels was simulated. In this method, the variation of PV model parameters with respect to temperature and solar irradiance were taken into account. Therefore, the proposed model generated more accurate results. In this proposal, a single PV module had been experimentally tested and modeled. The modeling results for various partially shaded conditions had been validated with the experimental data. The model can be extended further to a PV array with different configurations.

Mohajeri (2012) presented a new algorithm to track global MPP under partially shaded condition. The algorithm acts by a heuristic search of array voltage to find global MPP. In the process of heuristic search, reference voltage of PV output is generated and used for perturbation. After each perturbing, results are used for better search, until achieving the convergence constraint. To check the accuracy and

precision of the method an accurate model of PV array was implemented in MATLAB software and various tests were conducted.

Nguyen (2009) proposed a neural network based approach to estimate the maximum possible output power of a solar photovoltaic array under the non-uniform shadow conditions at a given geographic location. Taking the solar irradiation levels, the ambient temperature, and the Sun's position angles as inputs, a multilayer feed-forward neural network estimated the output power of the solar photovoltaic array. Training data for the neural network was generated by conducting a series of experiments on a shaded solar panel at different hours of a day for several days. After training the neural network, its accuracy and generalization properties were verified on test data. It was found that the neural network, which is an approximation of the actual shading function, was able to estimate the maximum possible output power of the solar PV arrays accurately. Further, the network was able to estimate the maximum output power for field data and gives rise to the possibility that the proposed approach can be used for making decision regarding the installation of solar PV arrays in the field.

P. Sharma *et al.* (2010) proposed that lightweight, flexible PV (FPV) modules are suitable forBIPV and stand-alone applications where contoured layouts are required and system weight is a constraint. They focused on optimization of a contoured FPV array which operates under Non Uniform Illumination (NUl) conditions. NUl conditions can occur at low solar angle for contoured layouts and also due to unexpected partial shading events. The output Power Voltage (P-V) characteristics under contouring and partial shading demonstrated severe oscillatory behavior around the maximum power region, which results in inefficient implementation of established tracking algorithms that seek to detect a dominant global maxima. An algorithm for MPP tracking has been proposed that takes into account both static and dynamic parameters. An integrated test system has been developed which can accurately monitor solar irradiance (range 100-1000 Watts/m2) and solar angle and load dependent instantaneous output voltage and current. The system has been designed for maximum current and voltage rating of 3A and 25V respectively. While an output power penalty results due to contouring, our results show a very small energy differential up to a maximum array contour value of 10°. This analysis may lead to development of novel, flexible PV array based designs.

P. Srinivasa Rao *et al.* (2014) investigated that one of the major factors that contribute to the reduction of PV power is partial shading. The reduction in power depends on module interconnection scheme and shading pattern. Different interconnection schemes are used to reduce the losses caused by partial shading. They presented a fixed interconnection scheme for PV arrays that enhances the PV power under different shading conditions. The proposed scheme facilitates distribution of the effect of shading over the entire array thereby reducing the mismatch losses caused by partial shading. The performance of the system was investigated for different shading conditions and the MATLAB/SIMULINK results were presented to show that the power extracted from the PV arrays under partial shading conditions is improved. Experimental results were provided to validate the proposed approach using a laboratory experimental setup. A comparison was also made between the electrical array reconfiguration scheme and the proposed scheme for a 5 × 5 PV array.

Peng Lei *et al.* (2010) proposed that regarding the reduction of the cost of energy (COE)for photovoltaic (PV) systems, two important issues are maximizing the efficiency of power generation and fault diagnosis. Their study presented an integrated framework that achieves both maximum power point tracking (MPPT) control and diagnosis of change in internal resistance simultaneously. An extremum seeking control (ESC) strategy is developed to maximize the power output of the PV array by regulating the voltage input to the DC-DC converter. Simulation results show that the ESC can achieve MPPT with periodic dither signals such as sinusoidal or square-wave signals. The degraded PV cells often demonstrate certain change of internal resistance, i.e. increase in the series resistance and decrease in the shunt resistance. The change of these internal resistances can induce the change of transient behavior of the dithered output remarkably for square wave dithering, which is validated with simulation study. The ESC with square-wave dithering can thus provides the dual benefits of MPPT and degradation detection simultaneously. Furthermore, simulation study on the PV modules under partial shading, though the P-V characteristic has changed, the proposed option is to pick the optimal regions to narrow down the ESC searching intervals and thus can locate the global maximum power point faster.

Peng Lei *et al.* (2011) investigated that the photovoltaic (PV) systems are often subject to shading in practical operation, which often results in multipack power–voltage (–) characteristics. Most existing maximum power point tracking (MPPT) control strategies are local-optimum oriented, based on the gradient search or its variations, e.g., perturb-and-observation (P&O) or extremum seeking control (ESC). In order to deal with the multimodal-characteristics for PV array with variable shading, they proposed a sequential ESC-based global MPPT control strategy, based on approximate modeling and analysis for the – characteristics under variable-shading circumstances. For the multipeak–characteristic curve, the bound of variation for the turning-point voltage is found, and based on which the initial voltage for the segmental search can be set. The local minimum of power for the previous segment is used as the start of the next segment, and thus the initial voltage can be set with consistent bound. Such a sequential scheme can thus significantly reduce the searching interval, i.e., the searching efficiency. Another parallel analysis was conducted for the staircase current–voltage (–) characteristic for variable-shading situation. It revealed that the current step size is proportional to the change of shading levels. The current profiles obtained by the sequential ESC-based global MPPT search can thus be used to indicate the shading distribution.

Perry Tsao *et al.* (2009) developed several architectures for implementing distributed max power point tracking (MPPT), and the characteristics of distributed MPPT as implemented in National Semiconductor's Solarmagic™ Power Optimizer are described in detail. A general method for calculating the max power voltage and current range for a string with distributed MPPT was presented.

Perry Tsao *et al.* (2009) proposed several architectures for implementing distributed max power point tracking (MPPT), and the characteristics of distributed MPPT as implemented in National Semiconductor's Solarmagic™ Power Optimizer were described in detail. A general method for calculating the max power voltage and current range for a string with distributed MPPT was presented.

Pradeep K. Peter *et al.* (2011) examined that Under uniform insolation there is only one Maximum Power Point (MPP) for the PV array. However, when the array is partially shaded, the power-voltage (P-V) characteristics get more complex,

displaying multiple peaks, only one of which called the Global Peak Power Point (GP3) corresponds to the MPP. The rest being local peaks, correspond to lower power. It is very essential, especially in portable systems, to track the MPP and extract maximum power from the array so as to minimize the overall size of the system. Hitherto, conventional dc-dc converters have been used as MPP trackers. They proposed a Pulse Width Modulated Switched Capacitor (SC) dc-dc converter based MPP tracker that tracks the peak power point under normal insolation and under partially shaded conditions. There is provision to reconfigure the SC converter configuration to maximize the efficiency even with large input-output voltage differentials. An algorithm is executed to track the GP3 during partial shading. A 10W SC based MPP tracker, weighing less than 50g, for charging a battery is implemented. The size and weight advantages of the SC based MPP tracker makes it ideal for use in portable systems.

Pradeep K., Sharma, Agarwal *et al.*(2011) investigated the use of 'by pass' diodes to prevent damage to series connected photovoltaic (PV) modules of a PV array in case of partial shading leads to complete power loss from the shaded modules. This paper explains the use of Switched Capacitor (SC) dc-dc converters in place of module by pass diodes to prevent power loss from partially shaded modules. SC converters have the advantage of being compact, cost effective and highly efficient under certain operating conditions. An SC converter is connected across each PV module. The SC converter injects an equalization current across the PV module while maintaining the module at its maximum power point voltage. The injected equalization current is the difference between the maximum current generated by any of the series connected PV modules and the current of that particular PV module. This enables the PV array to conduct the current corresponding to the current of the module generating maximum current. Thus partially shaded modules are allowed to generate whatever power they can.

Quingshan *et al.* (2010) investigated the performance comparison between diverse series/parallel PV array patterns when mismatch existed. Corresponding results demonstrated three aspects: firstly, bypass and blocking diode had great effect in reducing the mismatch power when the cell was in shadow; secondly, suggestions were put forward that parallel connection should be ranked prior consideration with

whole array design, to boost power output relatively; finally, the “doorsill effect” of local irradiation intensities, namely that global power output might not be influenced by changes of local shadows.

R. Hassan *et al.* (2011) investigated that a photovoltaic (PV) array performance depends on various operating conditions. Solar irradiation is considered the most important factor. The shading on PV array can result from passing clouds, trees, utility, telephone poles, or neighboring buildings. It causes not only power losses, but also increases non-linearity of V-Icharacteristics of PV array. This phenomenon has been studied in many research works using different software packages. They proposed a user-friendly Lab View tool to simulate effects of PV shading on its characteristics.

R. Ramaprabha and B.L. Mathur investigated that the increasing prices of fossil fuels and awareness of global warming have drawn attention towards the use of Solar Photo Voltaic Cells as an alternative source of electric power. Experimental determination of voltage-current characteristic of a solar panel is required for its simulation and setting the parameters of the circuit for extracting maximum power. An attempt to determine such a characteristic by connecting a variable resistance across the panel and measuring the voltage and current by meters is not successful all the times due to varying cloud positions and temperature during the experiment. A method to quickly draw the characteristics and recording the result using electronic load has been presented in this paper. As a single cell produces voltage around 0.7V only, a number of cells are connected in series forming a Solar Photo Voltaic Array (SPVA) to produce voltage levels of practical use. For a practical SPVA spread over large area, it is difficult to maintain uniform insolation on all the cells at all times. Such a problem may arise due to passing clouds, shadow caused by neighboring buildings, trees etc. Characteristics of three solar panels receiving different insolations and connected in series have been drawn using fast electronic load. A method to add the characteristics of individual panels to obtain the combined characteristics had also been presented.

Ramaprabha (2008) proposed an experimental determination of voltage-current characteristic of a solar panel is required for its simulation and setting the parameters

of the circuit for extracting maximum power. An attempt to determine such a characteristic by connecting a variable resistance across the panel and measuring the voltage and current by meters is not accurate all the times due to varying cloud positions and temperature during the experiment. A method to quickly draw the characteristics and recording the result using an electronic load was proposed by him. As a single cell produces voltage around 0.7V only, a number of cells were connected in series forming a Solar Photo Voltaic Array (SPVA) to produce voltage levels of practical use. For a practical SPVA spread over large area, it is difficult to maintain uniform isolation on all the cells at all times and the performance of the array is affected. Such a problem may arise due to passing clouds, shadow caused by neighboring buildings, trees etc. Under this non uniform insolated condition the P-V characteristics get more complex with multiple peaks. To get the maximum power from the SPVA under all conditions of isolation, it is very important to understand and predict the P-V characteristics. Characteristics of three solar panels receiving different insolations and connected in series have been drawn using fast electronic load. A method to add the characteristics of individual panels to obtain the combined characteristics was also been presented.

S. Moballegh *et al.* (2011) proposed an effective technique to model photovoltaic characteristics under various environmental circumstances including non-shaded and partially shaded conditions. The technique had been developed based on experimental study. It provides a versatile model using PSCAD which can represent any form of PV array with any configuration of bypass diodes. The impact of various partially shaded conditions as well as different temperature and solar irradiance levels can be simulated. In this method, the variation of PV model parameters with respect to temperature and solar irradiance are taken into account. Therefore, the proposed model generates more accurate results compared to some previously proposed models. A single PV module was been experimentally tested and modeled. The model can be extended further to a PV array with different configurations.

Salam (2012) proposed a simple circuit to increase the power yield of PV system under partial shading condition. The idea was to recover the power generated by the shaded module and then process it using power electronics circuit to become part of

the output power. Consequently, the inclusion of the circuit enabled the system to deliver more power compared to the bypass diode method. The concept was evaluated using Matlab-Simulink simulation and proven using an experimental test ring.

Sara M. MacAlpine *et al.*(2013) proposed that the power optimizers, which perform power conversion and distributed maximum power point tracking (DMPPT) at the sub array level, are available to mitigate losses associated with non-uniform operating conditions in grid-tied photovoltaic (PV) arrays, yet there is not a good understanding of their potential to increase energy capture. They developed and demonstrated a methodology for the use of a detailed software tool that can accurately model both partial shading and electrical mismatch at the subpanel level in a PV array. Annual simulations are run to examine the device-independent opportunity for power recovery in arrays with light, moderate, and heavy shading, and subpanel electrical mismatch variations based on measurements from a monocrystalline silicon array. It was found that in unshaded arrays, the potential energy gain is <1% using power optimizers, but in shaded arrays it increases to 3–16% for panel-level DMPPT and 7–30% for cell-level DMPPT. In the set of simulated cases, panel level power optimization recovers 34–42% of the energy that is lost to partial shading.

Sara Mac Alpine *et al.* (2011) investigated that mismatch losses have the potential to significantly affect the performance of PV arrays, so it is important to model them as accurately as possible. There are many variables that affect mismatch in a system, and it is often not realistic for commercially-available tools to rigorously model the complex behavior of PV systems operating under non-uniform conditions. Though many tools have simplified methods for estimating mismatch loss, there are few general guidelines for how it should be characterized in PV systems. Various mismatch scenarios and resulting system-level power losses are modeled using a custom, comprehensive PV array simulation environment. Based on the results of these simulations, and the capabilities of current modeling tools, suggestions are made for accurate modeling of module mismatch, partial shading, and panel orientation differences in PV arrays. With improved understanding of mismatch-related PV system power loss, researchers and system designers will be better able

to accurately assess and model its impact, enabling future PV research and maximizing the value of a diverse set of PV systems.

Sara Mac Alpine *et al.* (2011) Mismatch losses have the potential to significantly affect the performance of PV arrays, so it is important to model them as accurately as possible. There are many variables that effect mismatch in a system, and it is often not realistic for commercially-available tools to rigorously model the complex behavior of PV systems operating under non-uniform conditions. Though many tools have simplified methods for estimating mismatch loss. They guided for how it should be characterized in PV systems.

Shimizu (2001) presented a novel circuit, referred to as the generation control circuit (GCC), which enables maximum power to be obtained from all of the PV modules even if some of the modules are prevented from receiving light. The proposed circuit enables the individual PV modules to operate effectively at the maximum power point tracking, irrespective of the series connected PV module system. In addition, the total generated power was shown experimentally to increase for the experimental set-up used in the present study.

Shiva Moballegh *et al.* (2014) examined mismatch losses of photovoltaic (PV) arrays under partially shaded conditions. Electrical models of PV arrays under different irradiance levels and temperatures are developed. These models form the basis for the development of the power peak prediction schemes for PV arrays with series–parallel, bridge-linked, and total-cross-tied configurations. The developed schemes have been validated using commercial PV modules under different irradiance levels and partial shading conditions. The experimental results have confirmed that the power peak prediction schemes can successfully identify the most efficient configuration under any given partial shading conditions. Furthermore, the predicted power peaks are within 5% of the true measured ones under almost all the cases.

Shiva Moballegh *et al.*(2014) examined the mismatch losses of photovoltaic (PV) arrays under partially shaded conditions. Electrical models of PV arrays under different irradiance levels and temperatures are developed. These models form the basis for the development of the power peak prediction schemes for PV arrays with

series–parallel, bridge-linked, and total-cross-tied configurations. The developed schemes have been validated using commercial PV modules under different irradiance levels and partial shading conditions. The experimental results confirmed that the power peak prediction schemes can successfully identify the most efficient configuration under any given partial shading conditions. Furthermore, the predicted power peaks are within 5% of the true measured ones under almost all the cases.

Siyu Guo *et al.* (2011) analyzed that in most cases, solar cells within a PV module are connected in series in order to generate a high voltage. The series-connection is a limiting factor if a PV module is partially shaded, for example by nearby buildings, passing clouds or wildlife. In a string of cells connected in series, the cell that generates the smallest current limits the current of the whole string. Additionally, shaded cells operate in reverse bias and may, for example, show "hot spots" in case they are locally shunted. Bypass diodes are usually introduced to reduce such effects. The bypass diode will ensure the operation of the module with partially or fully shaded cells, at the price of a reduced voltage. However, the number of bypass diodes in a module is typically limited, so that shading of one single cell will still affect a significant percentage of the cells in the module. Distributed circuit simulations of a PV module under partial shading conditions were presented. The circuit was modeled from one-diode elements and implemented in LTspice IV. The influence of different grades of shading on the current voltage characteristics and the output power of the module are investigated. Also, different possible configurations of bypass diodes were evaluated. Finally, a time-dependent model of a PV module was constructed to simulate the modules' behavior if a shadow moves across it. The shadow's moving direction was also taken into consideration. It was observed that the choice of bypass diode configuration has a strong influence on the performance of a PV module under partial shading conditions.

Sourabh Dongaonkar *et al.* (2011) analyzed the problem of partial shading of thin film photovoltaic (TFPV) panels, using full two dimensional circuit simulations. By accounting for the panel structure and typical array configurations, we can accurately account for the effect of various shading configurations at the cell and panel level. They demonstrated the limitation of external bypass diodes in protecting shaded cells from reverse breakdown, and explore the whole range of shading

scenarios and their impact on reverse stress experienced by shaded cells. Based on the analysis, they identified the key aspects of shading problem, and formulate design rules for shadow aware geometrical design of panels. Finally, they presented a new radial design for a thin film PV panel, which not only improves the cell reliability under partial shading, but also enhances the array output current.

Srinivasa Vemurul *et al.* (2011) performed on the effectiveness of improving maximum power of a solar array comprising of modules and reconfigurable switches. MATLAB models aredeveloped for modules with and without bypass diodes. I-V andP-V curves are simulated for several shading patterns. Significantimprovement in the fill factors has been observed when using reconfigurable switches. The absence of reconfigurable switches reduced the peak power by almost 88% under some partial shading scenarios.

Vemuru (2012) proposed the impact of using bypass diodes on the solar cell performance under shading at a module level using MATLAB. Algorithms had been designed to study the effects of non-overlapping bypass diode configuration in a randomly shaded solar module and results were compared with modules devoid of bypass diodes. I-V and PV curves were plotted and maximum peak power was tracked for severe to intermediate levels of shading patterns.

Vemurul (2011) performed on the effectiveness of improving maximum power of a solar array comprising of modules and reconfigurable switches. Mat lab models were developed for modules with and without bypass diodes. I-V and P-V curves are simulated for several shading patterns. Significant improvement in the fill factors were observed when using reconfigurable switches. The absence of reconfigurable switches reduced the peak power by almost 88% under some partial shading scenarios.

W. F. Mohammad *et al.* (2011) presented an intelligent method of maximum power point tracking for photovoltaic systems. It is based on tracking the maximum power point by monitoring the voltage and current of the solar array and adjusting the duty cycle of the PWM switching signal of a buck-boost DC/DC converter. Both conventional fuzzy logic controller and neuro-fuzzy controller are implemented to evaluate PV system performance. Functional neuro-fuzzy controller has advantages

over that of fuzzy logic both in speed and generalization features.

Weidong Xiao *et al.* (2013) proposed modeling and simulation of photovoltaic (PV) powersystems have become increasingly important with wide acceptance and integration of solar energy in modern electric grids. The transcendental nonlinear equations describing the PV generator, which are coupled with the detailed switching models of the power electronic converters, generally result in slow and inefficient simulations, especially when long-term analyses are required. They focuses on simple and efficient modeling approaches that are suitable for long-term and large PV system analyses. This study provides a simplified PV-cell model and its parameterization, guaranteeing that the I–V characteristic curves pass through the typical points given in manufacturers' datasheets. Furthermore, several power interface models are provided for fast simulation purpose. A classical two-stage power processing system with intermediate dc link used as a string inverter, as well as a single-stage conversion unit used in distributed module-dedicated PV applications, are taken as application examples. The generalized modeling approach is thoroughly evaluated by comparing the simulation results with the experimental data of a practical 2.4-kW grid-tied PV solar unit. The proposed methodology was shown to have advantages over conventional modeling approaches to simulate long-term grid-tied operation.

Xiaolei WANG *et al.* (2010) proposed a method that based on basic technology parameters provided by supplier, considering solar array element number, the total number of series and parallel branch and according to real-time light intensity and temperature correction, which can calculate the Current-Voltage (I-U) characteristics curve ofthe solar array in an engineering calculation. This method has passed the text of MATLAB simulation. This method was applied to control the MPPT of photovoltaic energy system.

Yanli Liu *et al.* (2010) developed a new shading degree model-based self-adaptive reconfiguration method to reduce the effect of shadows on solar arrays. A switching matrix dynamically connects a solar adaptive bank to a fixed part of a solar photovoltaic array based on the shading degree model-based control algorithm to increase the power output of the solar PV array.

Young-HyokJi *et al.* (2011) investigated that conventional popular maximum power point tracking(MPPT) methods are effective under uniform solar irradiance. However, under solar irradiance mismatching conditions [partially shaded conditions (PSCs)], these MPPTs can fail for real MPPT (RMPPT), because multiple local maxima can be exhibited on the power-voltage characteristic curve. Although some researchers have worked on RMPPT under partial shading conditions, the methods have some drawbacks in terms of complexity and requirements for additional circuits, etc. A novel MPPT method capable of RMPPT under PSCs is proposed. The performance of the proposed MPPT method is analyzed according to the RMPP position.

Yuncong Jiang *et al.* (2011) investigated that the power generated by solar photovoltaic (PV) module depends on surrounding irradiance, temperature and shading conditions. Under partial shading conditions (PSC) the power from the PV module can be dramatically reduced and maximum power point tracking (MPPT) control will be affected. They presented a hybrid simulation model of PV cell/module and system using MATLAB/Simulink and Pspice. The hybrid simulation model includes the solar PV cells and the converter power stage and can be expanded to add MPPT control and other functions. The model was able to simulate both the I-V characteristics curves and the P-V characteristics curves of PV modules under uniform shading conditions (USC) and PSC. The model was used to study different parameters variations effects on the PV array. The developed model was suitable to simulate several homogeneous or/and heterogeneous PV cells or PV panels connected in series and/or in parallel.

Yuncong Jiang, Jaber A. Abu Qahouq *et al.* (2011) proposed efficient Solar Photovoltaic (PV) Management System thatespecially addresses the partial shading effects, among other cells mismatches, in a solar PV array/panel. They presented Fine Grained (FG) system, each single solar PV cell or a group of solar PV cells has its own MPPT (Maximum Power Point Tracking) controller and the power converter associated with it. The FG MPPT PV solar power management approach can ensure true maximum power point tracking (extract higher amount of power) under unified illumination conditions and under partial shading conditions. While the FG MPPT approach can have digital or/and analog implementations. They focused on

proposing an analog circuit implementation to reduce cost and size and to simplify system integration.

Ze Cheng *et al.* (2010) proposed a self-adaptive reconfigurationmethod based on fuzzy control, introduces how to apply it to the photovoltaic power generation systems, and explains why fuzzy control based on the shading degree of PV arrays can quickly respond to the changes of external environment. When the partial shade phenomenon occurs, changing the connections of the solar PV sub modules using switching matrix can quickly reduce the loss of output power.

R. Sridhar *et al.* (2010) proposed modeling and simulation ofphotovoltaic model. Taking in to account thetemperature and suns irradiance, the PV array wasmodeled and its voltage current characteristics andthe power and voltage characteristics are simulated. This enabled the dynamics of PVsystem to be easily simulated and optimized. It wasnoticed that the output characteristics of a PVarray are influenced by the environmental factorsand the conversion efficiency is low. Therefore amaximum power tracking (MPPT) technique isneeded to track the peak power to maximize theproduced energy. The maximum power point inthe power –voltage graph is identified by analgorithm called perturbation & observation(P&O) method or Hill climbing.

Jay Patel *et al.* (2013) presented the design and simulation of a photovoltaic system using incremental conductionmaximum power point tracking (MPPT) algorithm with boost converter. The current-voltage (I-V) & power-voltage (P-V) characteristics are obtained for solar module.

N. Belhaouas *et al.* provides comparative studies of built PV Module based on two-diode model using different MATLAB/Simulink library and it tries to compare theirs simulation results under partial shading condition. For each built PV module equipped with interactive graphic interface that can find the parameters regarding commercial module datasheets, with the best series and parallel resistances estimates. After select the Simulink library who give much better result, it was used for build photovoltaic array under different configurations in order to avoid the complicate mathematic models. The accurateness of different built PV panel was verified by applying the model to different manufacturer’s modules.

M.S. Mahmodian *et al.* (2012) analysed the mathematical model of the PV array with all the parameters involved,in the sequential steps. Then they simulated the I-V and P-V characteristics of PV array in differentclimatology conditions, by using both MATLAB M-file and Simulink.

KinalKachhiya *et al.* (2011) presented the simulation of the BP SX150SSolar Photovoltaic module using Matlab Simulink. The I-V & PVcharacteristics are obtained for various values of solarinsolation keeping the cell temperature constant. The MaximumPower Point Tracking (MPPT) algorithm, which is based on theincremental conductance method, is also described.

Malathy S *et al.* (2013) proposed lookup table (LUT) based model for solar photovoltaic (PV) module. The performance of asolar PV module is greatly influenced by insolation level and temperature. The experimental data including voltage andcurrent of the PV module are obtained for various insolation conditions. These data are then used to develop a lookup table to mimic the behaviour of the actual PV module. To ensure that the maximum power is transferred from the PV module to the load, maximum power point tracking (MPPT) algorithm is usually employed. The paper also proposes LUT basedMPPT to track the optimal operating point whenever the insolation changes. The V-I and V-P characteristics obtained fromthe look up table based MATLAB/Simulink model and the conventional model (five parameter model) are compared.

Sreekumar A.V. *et al.* (2014) discussed an improved perturb and observe technique for tracking global maximum power point of photovoltaic arrays that has better performance even under partial shading condition than the conventional tracking algorithms. Initially GMPP was located by adjusting the control signal and then the control moves to local MPP stage. For the present study, single ended primary inductance converter is used as the dc-dc interface for MPP Tracking. This is a buck-boost derived converter which is better suited for photovoltaic applications than conventional buck-boost converter. Solar panel had been modelled and partial shading effects were implemented.

Francisco M. *et al.* (2005) presented a circuit-based simulation model fora PV cell in order to allow estimate the electrical behavior of thecell with respect changes on

environmental parameter oftemperature and irradiance. An accurate PV module electricalmodel is presented based on the Shockley diode equation. Thegeneral model was implemented on Matlab scrip file, and accepts irradiance and temperature as variable parameters and outputsthe I-V characteristic. A particular typical 60W solar panel wasused for model evaluation, and results was compare with points taken directly from the manufacturer's published curves andshow excellent correspondence to the model.

Basim A. Alsayid, *et al.* (2013) concluded that In a solar photovoltaic array, it is possible that shadow may fall over some of its cells. Under partial shading conditionsthe PV characteristic gets more complex with multiple peaks. The purpose of this paper is to illustrate, by analyzingdifferent shading situations, the effects that partial shading can cause in a PV array. First this is done by simulation using MATLAB/Simulink, then the impact of shading is illustrated experimentally by measurements on a two commercial140 W PV panels series connected.

CHAPTER 3

MODELING AND SIMULATION FOR PARTIAL SHADING STUDY

3.1 INTRODUCTION

The purpose of this chapter is to model and simulate PV arrays in order to study the effects of partial shading on P-V and I-V characteristics, hot spots and generated power. The models can also be used to study the use of by-pass diodes and different PV interconnection styles to reduce partial shading effects. Different interconnections of PV arrays will be presented in this chapter.

In this chapter MATLAB/SIMULINK is used to model and simulate PV systems under partial-shading condition, which is a basic requirement for the next chapters. The model is user friendly for data inputting and displaying output results and it can be easily changed for different PV configurations. The following subsections will give modeling and simulation for PV cells, modules, arrays and farms.

3.2 PV CELL

The PV cell is modeled using the single diode model shown in Figure 3.1. This model is composed of a current source, a diode and two resistors. The accuracy of this model is high enough for comparison of different designs in terms of partial shading (Femia*et al.*, 2008). Equations (3.1) to (3.3) describe this model.

$$I_{SC} - I_D - \frac{V_D}{R_P} - I_{SC} = 0 \tag{3.1}$$

$$I_D = I_o\left(e^{\frac{V_D}{V_T}} - 1\right) \tag{3.2}$$

$$V_C = V_D - R_S I_C \tag{3.3}$$

where I_{SC} is the PV cell short circuit current, I_D the diode current, Io the reverse bias diode saturation current, I_C the PV cell output current, V_D the voltage across the diode, V_T the thermal voltage, V_C the PV cell output voltage, R_P the parallel resistance and R_S the series resistance. These three equations could be written in the

form shown in (3.4) by substituting (3.2) and (3.3) in (3.1).

$$f(V_C, I_C) = 0 \tag{3.4}$$

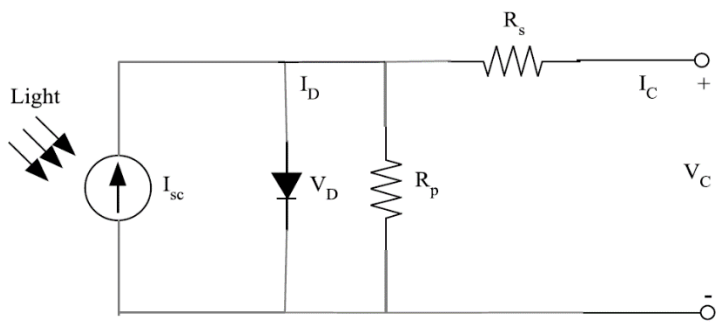

Figure 3.1: PV cell model

3.3 PV Module

PV module is modeled as a group of PV cells which could be connected in Series-Parallel (SP) or Total-Cross-Tied (TCT) style in order to get the required voltage and current. Figure 3.2 shows the SP connection for PV modules. The equations (3.5) to (3.9) describe this model.

$$I_M = \sum_{j=1}^{n} I_j \tag{3.5}$$

$$V_M = \sum_{i=1}^{m} V_C(i,j) \ \forall j \tag{3.6}$$

$$f\big(V_C(i,j), I_C(i,j)\big) = 0 \ \forall \ i,j \tag{3.7}$$

$$I_C(i,j) = I_j \ \forall \ i,j \tag{3.8}$$

$$P_M = V_M I_M \tag{3.9}$$

where V_M is the module voltage, I_M the module current, P_M the module generated power, the branch current, n the number of branches , m the number of series cells, i a row index and j a column index. For the purpose of simulation, a commercial PV module, i.e., Shell Power Max Ultra SQ85-P,has been selected. The parameters of this module are given in Appendix A. Figure 3.3 and Figure 3.4 shows the I-V and P-V characteristics of this module at different irradiance levels.

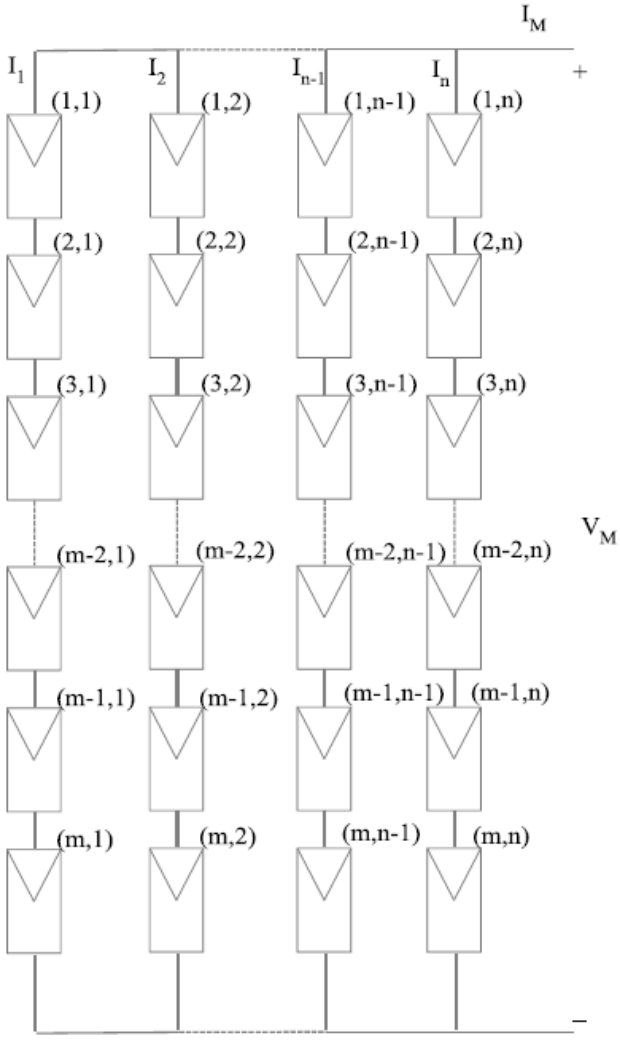

Figure 3.2: PV module connected in series-parallel style

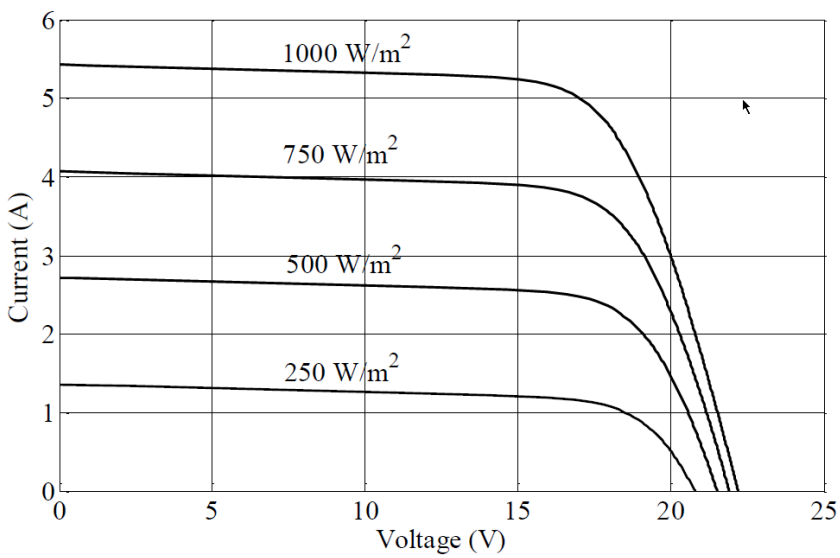

Figure 3.3: I-V characteristics of Shell SQ85-P module

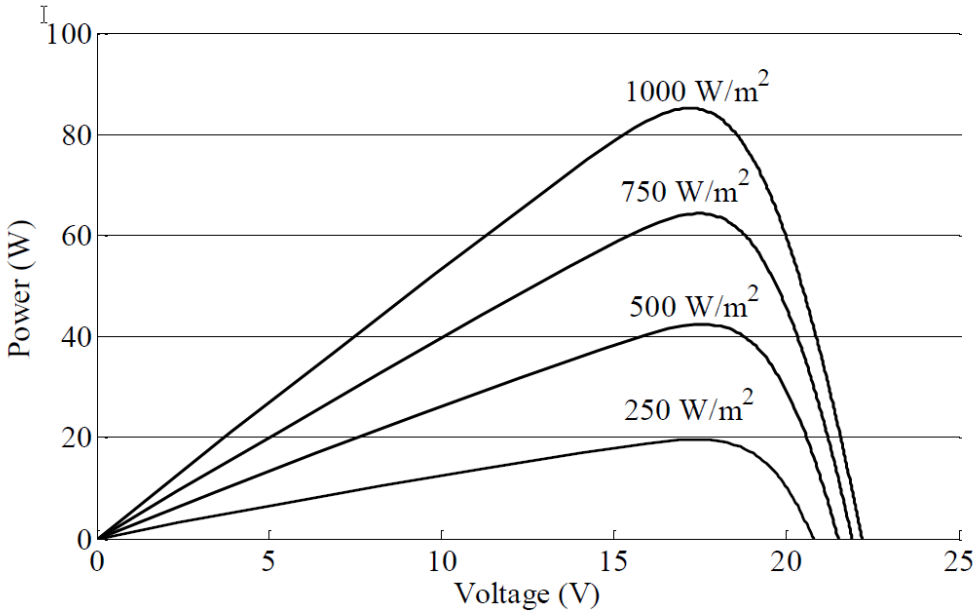

Figure 3.4: P-V characteristics of Shell SQ-85P module

3.4 PV ARRAY

PV arrays can be connected in SP or TCT style, as mentioned in the previous chapter. Each of these connections styles has its own model. The SP model is like the module model shown in Figure 3.2 after replacement of cells by modules. Equations (3.10) to (3.14) describe this model:

$$I_A = \sum_{j=1}^{n} I_j \tag{3.10}$$

$$V_A = \sum_{i=1}^{m} V_C(i,j) \ \forall j \tag{3.11}$$

$$f\big(V_M(i,j), I_M(i,j)\big) = 0 \ \forall i,j \tag{3.12}$$

$$I_M(i,j) = I_j \ \forall i,j \tag{3.13}$$

$$P_A = V_A I_A \tag{3.14}$$

where V_A is the array voltage , I_A the array current, P_A the array generated power, I the branch current, *n* the number of branches , *m* the number of series modules, *i* a row index and *j* a column index. For TCT connection shown in Figure 3-5, the model is described by Equations (3.15) to (3.19).

$$I_A = \sum_{j=1}^{n} I_M\,(i,j) \ \forall i \tag{3.15}$$

$$V_M = V_i \; \forall \; i, j \tag{3.16}$$

$$V_A = \sum_{i=1}^{m} V_i \tag{3.17}$$

$$f\big(V_M(i,j), I_M(i,j)\big) = 0 \; \forall \; i, j \tag{3.18}$$

$$P_A = V_A I_A \tag{3.19}$$

A simulation for a 6 × 4 PV array under uniform irradiance level condition is performed when the array is connected in SP and TCT. The results are shown as in Figure 3.6 and Figure 3.7. The simulation results of the PV array under non-uniform irradiance levels given in Figure 3.8 are shown in Figure 3.9, where the numbers indicate irradiance levels in W/m^2. The results show that TCT connection generates more power than SP during partial shading. Figure 3.10 show that the use of by-pass diodes across each module increases generated power as well as the number of peaks in the P-V characteristics.

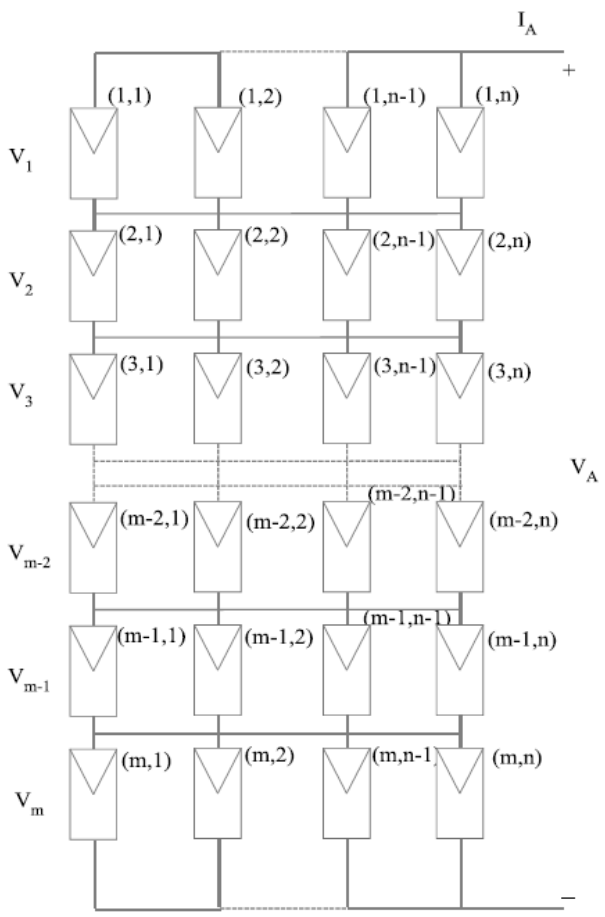

Figure 3.5: PV array connected in TCT

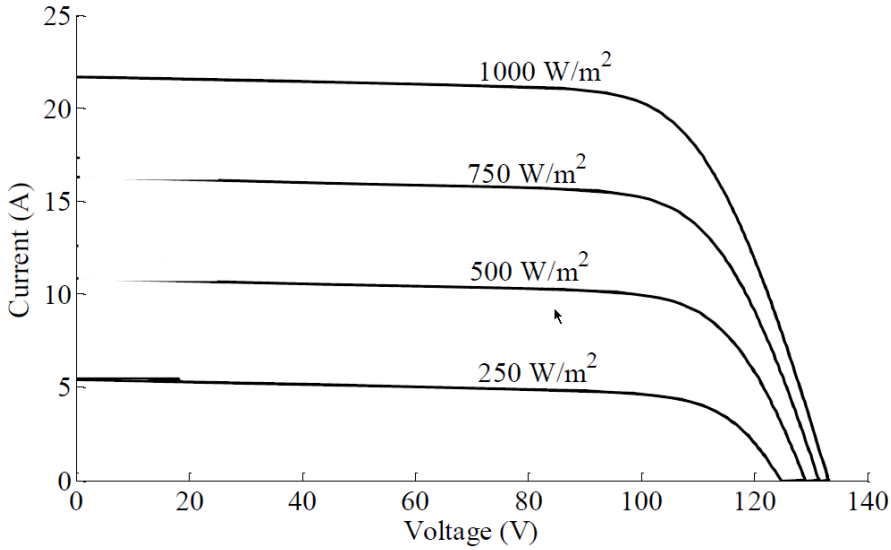

Figure 3.6: IV characteristics of the PV array

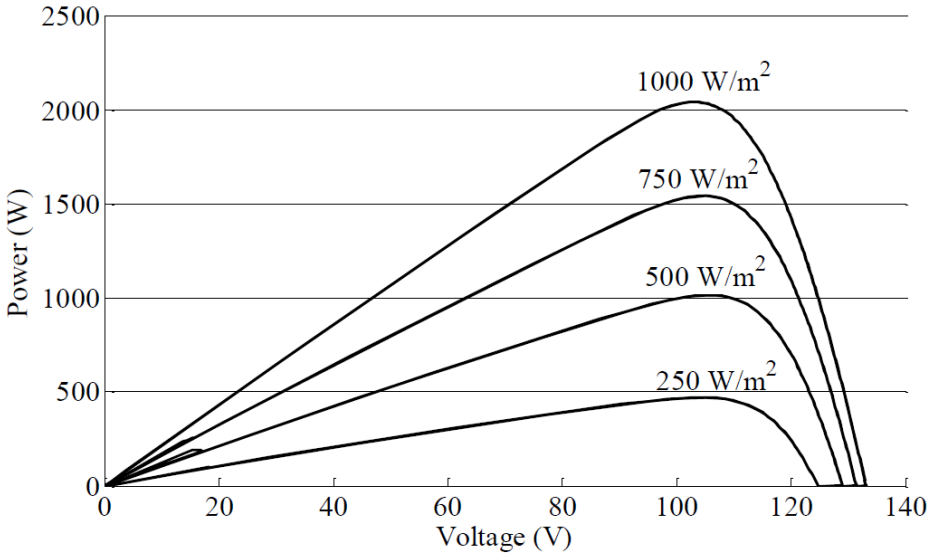

Figure 3.7: PV characteristics of the PV array

1000	1000	1000	1000
1000	1000	1000	1000
1000	1000	1000	1000
0	0	1000	1000
0	0	1000	1000
0	0	1000	1000

Figure 3.8: Non-uniform irradiance condition

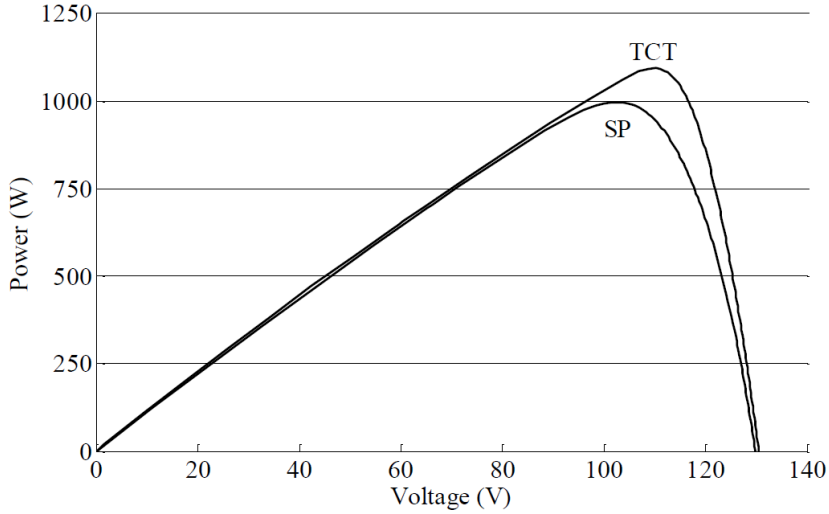

Figure 3.9: PV characteristics for non-uniform irradiance levels without by-pass diodes

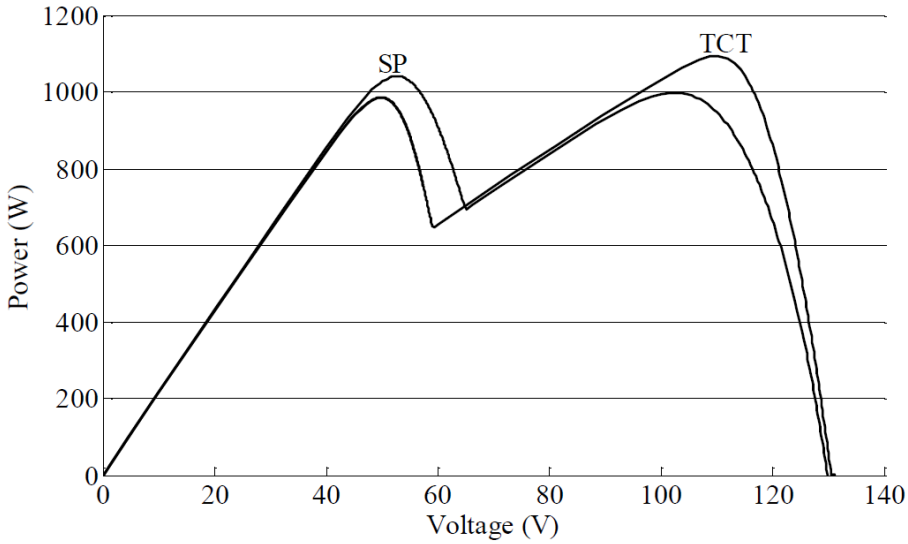

Figure 3.10: PV characteristics for non-uniform irradiance levels with by-pass diodes

3.5 PV FARM

PV farm has three concepts as mentioned in chapter 2; these are central, string and modular. Themodel for the central concept is similar to that of the SP PV array shown in Figure 3.2 and is given by Equations (3.20) to (3.24). The model for the modular concept is exactly the same as the array model.

$$I_F = \sum_{j=1}^{n} I_j \tag{3.20}$$

$$V_F = \sum_{i=1}^{m} V_A(i,j) \ \forall j \tag{3.21}$$

$$f\left(V_A(i,j), I_A(i,j)\right) = 0 \; \forall \; i,j \tag{3.22}$$

$$I_A(i,j) = I_j \; \forall \; i,j \tag{3.23}$$

$$P_F = V_F I_F \tag{3.24}$$

where V_F is the farm voltage , I_F the farm current, P_F the farm generated power, I the branch current, *n* the number of branches , *m* the number of series arrays, *i* a row index and *j* a column index. The model for string concept shown in Figure 3-11 is given by Equations (3.25) to (3.28).

$$I_F = I_A(i) \; \forall \; i \tag{3.25}$$

$$V_F = \sum_{i=1}^{m} V_A\,(i) \tag{3.26}$$

$$f\left(V_A(i), I_A(i)\right) = 0 \; \forall \; i \tag{3.27}$$

$$P_F = V_F I_F \tag{3.28}$$

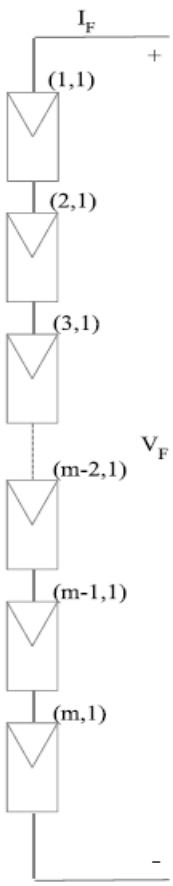

Figure 3.11: String PV farm concept

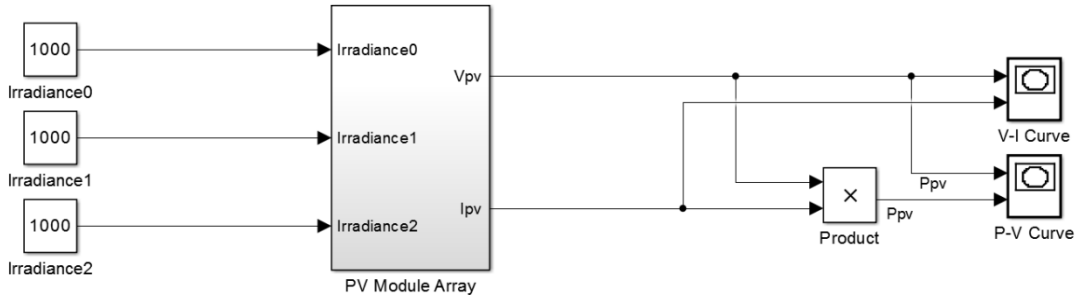

Figure 3.12 : Simulink Model of PV Array

3.6 SUMMARY

This chapter presented the mathematical models and simulation results for PV cells, modules, arrays and farms. The models are nonlinear and their nonlinearity increases with the system size. A simplified cell model which is suitable for partial shading study is selected to reduce computational efforts. The solution of these models is done using MATLAB/SIMULINK in a user-friendly environment for data inputting and for getting output results. The simulated model can be changed easily to be used with any design or configuration.

CHAPTER 4

OPTIMAL TOTAL-CROSS-TIED INTERCONNECTION TO REDUCE MISMATCH LOSSES

4.1 INTRODUCTION

PV farm installations require tens of acres of land to avoid partial shading caused by consecutive rows of PV arrays. The arrays are usually installed in landscape instead of portrait to avoid partial shading caused by consecutive rows, thus increasing installation cost. In addition to PV farms, Building Integrated Photovoltaic (BIPV) installations usually suffer from partial shading caused by nearby objects such as trees and buildings.

This chapter proposes new interconnection schemes for PV arrays that can significantly reduce partial shading losses caused by easy-to-predict sources such as consecutive rows, buildings and trees. The chapter is organized as follows. First, mismatch losses and PV array interconnection schemes are presented. Then, the proposed optimal total-cross-tied interconnection scheme is introduced. The optimal cross-linked interconnection is presented next, followed by the solution methodology and simulation model. Finally, some application case studies are presented.

4.2 MISMATCH LOSSES

PV arrays are normally composed of large numbers of PV modules. These PV modules can have different current-voltage (I-V) characteristics. The difference between module characteristics is called I-V mismatch. I-V mismatch can have permanent or temporary sources.

Permanent sources cause I-V mismatch by changing one or more parameter in the PV module such as the value of parallel resistance and/or series resistance. Permanent sources include manufacturing tolerance, performance degradation and module cracking. Power loss from manufacturing tolerance mismatch is below 1% for modern Si-modules (Spertino F*et al.*, 2009). These mismatch losses could increase to up to 2.4% due to aging (N.D. Kaushika*et al.*, 2007).

A temporary source for I-V mismatch is changes in the irradiance level received by PV modules. I-V mismatch caused by the changes in irradiance level is called partial shading of PV array. Furthermore, partial shading sources could be divided into easy-to-predict and difficult-to-predict sources. Easy-to-predict sources include nearby PV arrays, buildings and trees. Examples for difficult-to-predict sources are clouds, soiling and snow. Partial shading loss reduces annual energy yield by 5.10% inBuilding Integrated Photovoltaic (BIPV) systems (M. Drif*et al.*, 2008) and by 3.6% in PV farms (Femia*et al.*, 2008). I-V mismatch causes power losses in PV arrays via the following four mechanisms:

4.2.1 Array Maximum Power Point (MPP) is not coherent with those of the individual modules

Each module in the PV array should operate at its own maximum power point in order to maximize the power production of the PV array. This can be ensured by a single Maximum Power Point Tracker (MPPT) if there is no mismatch between the modules. In case of mismatch, there is no guarantee that all the modules are operating at their Maximum Power Points (MPPs). This can be avoided by having a dedicated MPPT for each PV module (Roman E*et al.*, 2006). Another solution is to use a multilevel inverter with independent voltage control for each PV module (Bratcu A.I.*et al.*, 2011). It is proposed to connect all the modules in parallel to avoid these losses. The proposed solutions require additional components and circuits that can increase the system complexity and cost. It is proposed (Velasco-Quesada*et al.*, 2009) to use switches and sensors to reconfigure the PV array to achieve higher coherence among the modules' MPPs. The proposed approach is dynamic and requires sensors and switches; however the approach proposed in this chapter is static and does not require any sensors or switches.

4.2.2 MPPT is misled by existence of multiple MPPs

Some PV arrays are supplied with bypass diodes across their modules. Under I-V mismatch, these diodes create multiple MPPs for the PV array. These MPPs can mislead the MPPT and make it identify a local optimal point as the global maximum point, leading to reduction in generated power (Carannante G*et al.*, 2009). This problem has been investigated by many researchers who have developed better

MPPT algorithms that can find the global maximum power point (Patel H*et al*., 2008). However, these algorithms are complex and may require high online computational effort.

4.2.3 Bypass diodes are turned ON

PV modules with bypass diodes across them will not produce any useful power when theses diodes are turned ON, although they might be capable of producing some useful power. Moreover, bypass diodes create additional power loss due to their ON resistances (S. Silvestre*et al*., 2009). A new circuit is proposed to avoid bypass diode ON resistance losses. However, this circuit does not recover the power that is lost due to bypassing of the modules.

4.2.4 Reverse currents

Some parallel connected PV modules can suffer from reverse currents due to I-V mismatch. This reverse current causes these modules to absorb power instead of producing power, which reduces the production and increases the heating losses. Some PV arrays are equipped with reverse current blocking diodes to prevent reverse currents (Spertino*F et al*., 2009).

The previous discussions showed that I-V mismatch losses reduce the annual energy yield from the PV array to a great extent. The objective of the work presented in this chapter is to limit the reduction in annual energy yield.

4.3 INTERCONNECTION SCHEMES

PV modules can be interconnected in four main styles: (i) Series Parallel (SP), (ii) Total Cross Tied (TCT), (iii) Bridge linked (BL) and (iv) Honey Comb (HC), as shown in Figure 4.1.

In SP interconnection, modules are connected in series forming strings; then, theses strings are connected in parallel. However, in TCT interconnection, the modules are connected in parallel; then, these parallel circuits are connected in series. BL and HC could be seen as interconnectionssomewhere in-between the two extreme cases of SP and TCT.

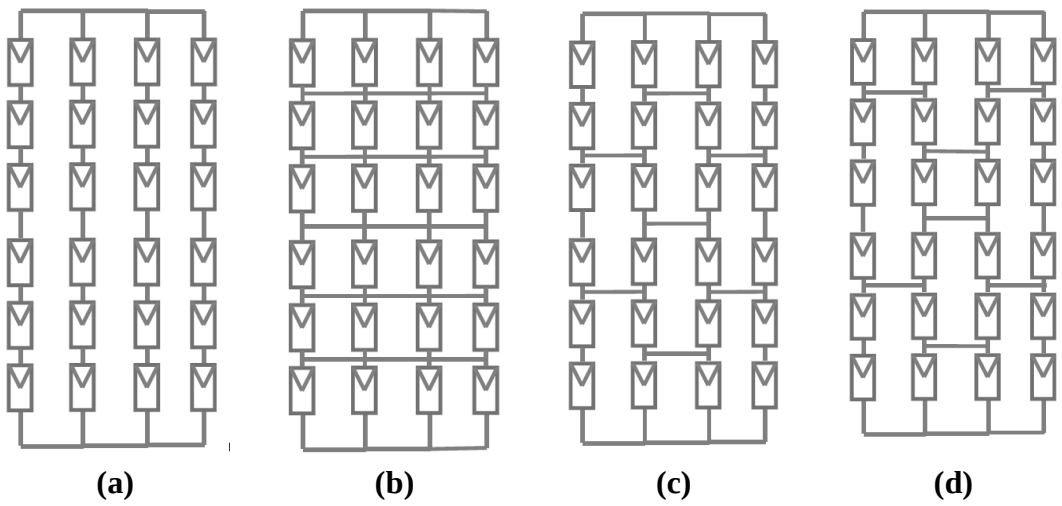

Figure 4.1: Main PV module interconnection styles: (a) 6 × 4 SP interconnection, (b) 6 × 4 TCT interconnection, (c) 6 × 4 BL interconnection and (d) 6 × 4 HC interconnection.

TCT, BL and HC reduce mismatch losses from partial shading when compared to SP (Kaushika N.D*et al.*, 2003). However, the reduction is higher in case of TCT interconnection than that in case of BL. The authors developed an algorithm to select the best interconnection among SP, TCT, BL and HC for certain shading situations. They found TCT to be the best interconnection foralmost all partial shading situations. Partial shading affects the modules' short circuit currents, thus affecting the modules' output currents at their MPPs. This leads to lack of coherence between modules' MPPs and array's MPP. In the case of SP, this issue is more severe than that in case of TCT. The reason is that SP has more number of series strings than TCT. Also, TCT interconnection reduces the possibility of turning the bypass diodes ON, thus reducing the corresponding losses.

When it comes to manufacturing tolerance mismatch, TCT can indeed reduce mismatch losses when compared to SP (Picault D *et al.*, 2010). However, these losses are now falling below 1 % due to technological advances.

Theoretical studies on reliability of PV arrays show that TCT interconnection is more reliable than SP and is capable of doubling the operational life time of the array (Nalin K. Gautam *et al.*, 2002). The reason is that TCT has more parallel circuits than SP. The manufacturing cost of TCT-connected modules has been investigated. The investigation shows that there is no reason for TCT-connected modules to have a higher cost than SP-connected modules in mass production.

The previous discussion shows the superiority of TCT connection over SP in terms of lower mismatch losses and higher reliability. Also, it shows that the manufacturing cost of TCT could be similar to that of SP. Therefore, TCT connection will be used as a starting point to build upon in this work.

4.4 OPTIMAL-TOTAL-CROSS-TIED INTERCONNECTION

In practice, partial shading analysis is performed in the planning stage, i.e., before building the PV field , to predict the possible partial shading situations. The results indicate the shading pattern, irradiance levels and duration (t_g) for each partial shading situation and the total number of partial shading situations (N). Accordingly, the OTCT interconnection scheme is derived during the planning stage. Figure 4.2 shows a number of different partial shading situations.

1000	1000	1000	1000
1000	1000	1000	1000
1000	1000	1000	1000
1000	1000	1000	1000
1000	1000	1000	1000
500	500	500	500

1000	1000	1000	1000
1000	1000	1000	1000
1000	1000	1000	1000
250	250	1000	1000
250	250	1000	1000
250	250	1000	1000

1000	1000	1000	1000
1000	1000	1000	1000
1000	1000	1000	1000
1000	1000	1000	1000
500	500	500	500
500	500	500	500

1000	1000	1000	1000
1000	1000	1000	1000
1000	1000	1000	1000
0	1000	1000	1000
0	0	1000	1000
0	0	0	1000

500	500	500	500
750	750	750	500
1000	750	750	500
1000	1000	750	500
1000	1000	1000	750
1000	1000	1000	1000

Figure 4.2: A number of different Partial Shading Situations

Mismatch power losses could be caused by permanent sources or temporary sources, as discussed earlier. Temporary sources have a time component which should be taken into consideration. Therefore, this work proposes to find one TCT interconnection that maximizes array's power production under mismatch for several time segments, which results in maximum energy production under mismatch, as in (4.1). The TCT interconnection found is the Optimal-Total-Cross-Tied (OTCT) interconnection for maximizing array's generated energy under mismatch. OTCT connects the modules from the same row into different parallel circuits in such a way that energy production under mismatch is maximized. Energy production is maximized due to the increased coherence between modules' MPPs and array's MPP and due to lower probability of turning ON the bypass diodes. This is completely different than traditional TCT interconnection in which the modulesfrom the same row are connected in one parallel circuit without any maximization of generated energy.

$$\text{Maximize } EA = \sum_{g=1}^{N} VA_g IA_g t_g \tag{4.1}$$

In (4-1), VA_gIA_g is the array's output power at time segment g during mismatch. This power is multiplied by segment duration t_g to find array's output energy during time segment g during mismatch. The total number of time segments is N The sum of all energies during different time segments will then give the array's total energy during mismatch. This formulation takes into consideration the impact of permanent and temporary sources of mismatch.

4.4.1 Existence Variable

Consider the m parallel circuits shown in Figure 4.2, where each circuit has n parallel modules. The index for parallel circuits is i and the index for modules is q.

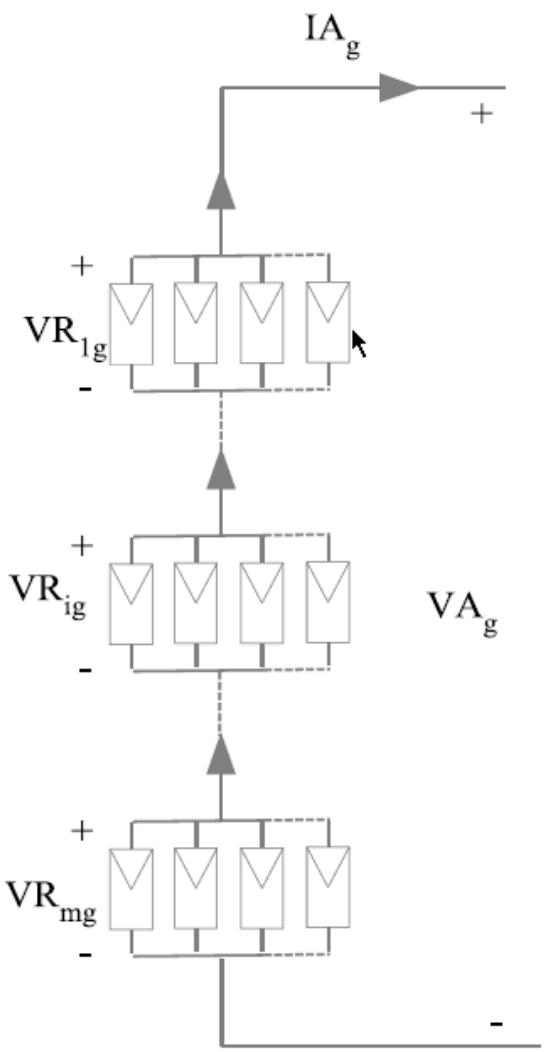

Figure 4.3: A PV array composed of m parallel circuits with n modules per parallel circuit

All positions in one parallel circuit are identical; therefore, there is no need for an index for the positions of modules inside the parallel circuit. However, an index j is defined for the positions of the module in the parallel circuits. This index is required to find Kirchhoff's Laws' constraints as will be shown later. An existence variable is required to find the position of module q in the OTCT interconnection to maximize the generated energy during mismatch. The existence variable can be defined as follows:

Definition: The Existence Variable y_{ijq} is defined as a binary variable such that:

$$y_{ijq} = \begin{cases} 1 & \text{if module q exist at position ij} \\ 0 & \text{otherwise} \end{cases}$$

4.4.2 Kirchhoff's Laws' Constraints

These constraints are Kirchhoff's Current Law (KCL) and Kirchhoff's Voltage Law (KVL) for OTCT interconnection. Applying KCL to each parallel circuit means that the sum of the currents of modules in each parallel circuit is equal to the array's current. This can be mathematically formulated as

$$IA_g = \sum_{j=1}^{n} \sum_{q=1}^{mxn} IM_{qg} y_{ijq} \qquad \forall i, g \tag{4.2}$$

In (4.2), the current of module q at time segment g, i.e., IM_{qg}, is multiplied by the existence variable y_{ijq}. The result of this multiplication will give the module's current only if the module exists at position ij. Therefore, the summation over q will give the existing module current at position ij. It should be noted that this existing module current will be only from one module because each position will have only one module, as will be shown later by the logical constraints. After finding the existing module current, the summation over j will give the total current of the existing modules. Equation (4.2) is repeated for each parallel circuit i for each time segment g, implying that there are m×N equations.

Applying KVL to each parallel circuit means that the voltages of all existing modules in one parallel circuit are equal to one another and equal to the row voltage VRig, as described by (4.3).

$$VR_{ig} = \sum_{q=1}^{mxn} VM_{qg} y_{ijq} \qquad \forall i, j, g \tag{4.3}$$

Similar to existing module current modeling, the existing module voltage is modeled by the summation over q for the multiplication of module's voltage and the existence variable. This multiplication will give the module's voltage only if module q exists at position ij. In the logical constraints section, each position will be constrained to have one module only. Therefore, the summation over q will give the voltage of the only one module that exists at position ij. This equation is repeated for each position and for each time segment, which means that there are m×n×N equations.

Applying KVL to the arrays' input means that the sum of the individual row voltages is equal to arrays' voltage, as described by (4.4).

$$VA_g = \sum_{q=1}^{m} VR_{ig} \qquad \forall g \tag{4.3}$$

In Equation (4.4), the summation over i for VR_{ig} will give the total array voltage. This equation is repeated for each time segment (i.e., N times).

4.4.3 Modules' Model Constraints

These constraints are the model equations for the PV modules. The most commonly-used models are the single-diode model and the double-diode model. Single-diode model, described by (4.5), is used in this work to reduce computational effort.

$$IRR_{qg}\frac{I_{scq}}{G} - I_{oq}\left(e^{\frac{\frac{VM_{qg}}{N_{sq}}+R_{sq}IM_{qg}}{V_{Tq}}} - 1\right) - \frac{\frac{VM_{qg}}{N_{sq}}+R_{sq}IM_{qg}}{R_{Pq}} - IM_{qg=0} \tag{4.5}$$

Equation (4.5) is essential in development of the OTCT interconnection because it represents all sources of mismatch. Permanent sources are reflected in I_{scq}, I_{oq}, N_{sq}, R_{sq}, V_{Tq} and R_{Pq}, while temporary sources are represented by IRR_{qg}. This equation is repeated for each module and for each time segment (i.e., m×n×N times).

4.4.4 Logical Constraints

The logical constraints are those which must be satisfied in order to have a practical solution for the problem. The first constraint states that each position ij will have only one module q, as described by (4.6).

$$\sum_{q=1j}^{mxn} y_{ijq} = 1 \qquad \forall i, j \tag{4.6}$$

This constraint is repeated m×n times. The second constraint states that all modules should exist (i.e., all modules must be connected), as described by (4.7).

$$\sum_{i=1}^{m} \sum_{j=1}^{n} y_{ijq} = 1 \qquad \forall i, j \tag{4.7}$$

This constraint ensures that each module q will have a position ij. This constraint is repeated m×n times. It should be noted that both constraints (4.6) and (4.7) are needed. For example, if (4.6) is used alone, then the same module may exist at different positions. Also, if only (4.7) is used, then some positions will have more than one module.

4.5 SOLUTION ALGORITHM AND SIMULATION MODEL

The OTCT problem is a Mixed Integer Non-Linear Programming (MINLP) problem. MINLP problems can be solved by Branch and Bound (BB) algorithm. BB uses relaxation and separation to solve the MINLP problem. The strategy of BB algorithm is to solve the original MINLP problem after relaxing the integer variables, that is, to solve the Non Linear Programming (NLP) problem using an NLP solution method such as Interior Point Method (IPM). If the solution of the NLP is integer, then the global optimum is found. If not, then the NLP problem is separated into two sub-problems using an integer variable with a non-integer value. One of the sub-problems is solved and if the sub-problem is not fathomed, it should be divided into two new sub-problems. The BB process stops when all the sub-problems have been fathomed. The stored incumbent at the end of the process gives the global optimal solution. The OTCT problem is a planning problem; therefore, it isrequired to reach the optimal solution in a reasonable time. BB can reach the solution in a reasonable time for small- to medium-size arrays. However, for larger arrays another algorithm should be used.

A simulation model is needed to compare different interconnections (i.e., SP, TCT and OTCT). The simulation model is built in MATLAB/SIMULINK environment. This model is based on the single-diode model for PV modules, described by (4.5) and shown in Fig. 4.3. The PV array is constructed from the interconnection of PV

modules in SP, TCT or OTCT interconnection style. A Bypass diode is connected across each PV module and no reverse current blocking diodes are used. It should be noted that the wiring resistance is ignored in the simulation model. The PV module data is given in Appendix A.

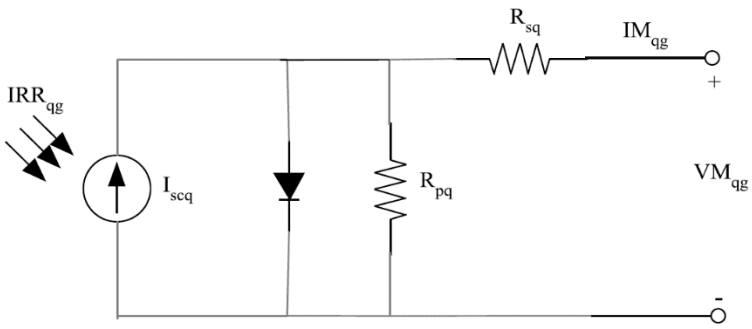

Figure 4.4 : PV module single-diode model.

4.6 PERFORMANCE RATIO

The array's overall Performance Ratio (PR) normalizes the effect of mismatch losses based on the rated output dc power P_{dc}, and allows comparison between arrays of different sizes under different irradiance conditions HA (B. Marion*et al.*, 2005). The PR is directly related to the overall system efficiency; a higher PR means higher system efficiency.

$$PR = \frac{EA_{max}}{HA} \times \frac{G}{P_{dc}} \tag{4.8}$$

EAmax and HA used in (4-8) can be found from (4-9) and (4-10), respectively.

$$EA_{max} = \sum_{g=1}^{N} MPPA_g t_g \tag{4.9}$$

$$HA = \sum_{g=1}^{N} IRRA_g t_g \tag{4.10}$$

The array's PR for each time segment g can then be found as follows:

$$PR_g = \frac{MPPA_g t_g}{IRRA_g t_g} \times \frac{G}{P_{dc}} = \frac{MPPA_g}{IRRA_g} \times \frac{G}{P_{dc}} \tag{4.11}$$

4.7 APPLICATION EXAMPLES

In the following application examples, the focus, in particular, is on partial shading in PV fields. The three shading patterns shown in Figure 4.4 are approximations for

the most common partial shading patterns in PV fields (Weinstock D*et al.*, 2004). These patterns happen when the front-row arrays are shading the bottom of the back-row arrays, causing the overall array to be partially shaded. The irradiance levels of the shaded modules depend on the distance between the rows and the environmental conditions. Therefore, two application examples are considered: (i) the irradiance levels of the shaded modules are 50% of those of the un-shaded modules; (ii) the irradiance levels of the shaded modules are 25% of those of the un-shaded modules. It should be noted that each application example represents a different PV field; therefore, one OTCT interconnection is found for each field. Each situation has a time segment g such that tg represents the total time duration of each partial shading situation throughout the year. This total time duration is assumed to be the same for all partial shading situations in these applications for simplicity and without loss of generality.

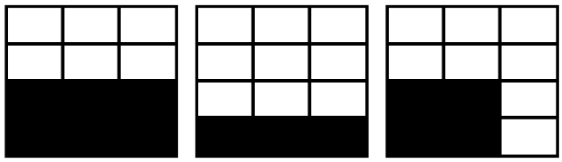

(a) (b) (c)

Figure 4.5: Three easy-to-predict partial shading situations

4.7.1 Application Example 1

In this application example, it is assumed that the irradiation level for the shaded modules is 50% of that for of the un-shaded ones, as shown in Figure 4.5, where the numbers indicates irradiance levels in W/m^2. The static OTCT interconnections for these situations can be found using the optimization model discussed earlier, as shown in Figure 4.6 (b). Figure 4.6 (a) shows the TCT interconnection for the same array, where the numbers indicate the coordinates of modules' physical positions. The simulation model is used to compare the performance of the OTCT with those of SP and TCT interconnections for each partial shading situation.

1000	1000	1000
1000	1000	1000
500	500	500
500	500	500

(a)

1000	1000	1000
1000	1000	1000
1000	1000	1000
500	500	500

(b)

1000	1000	1000
1000	1000	1000
500	500	1000
500	500	1000

(c)

Figure 4.6: Three partial shading situations

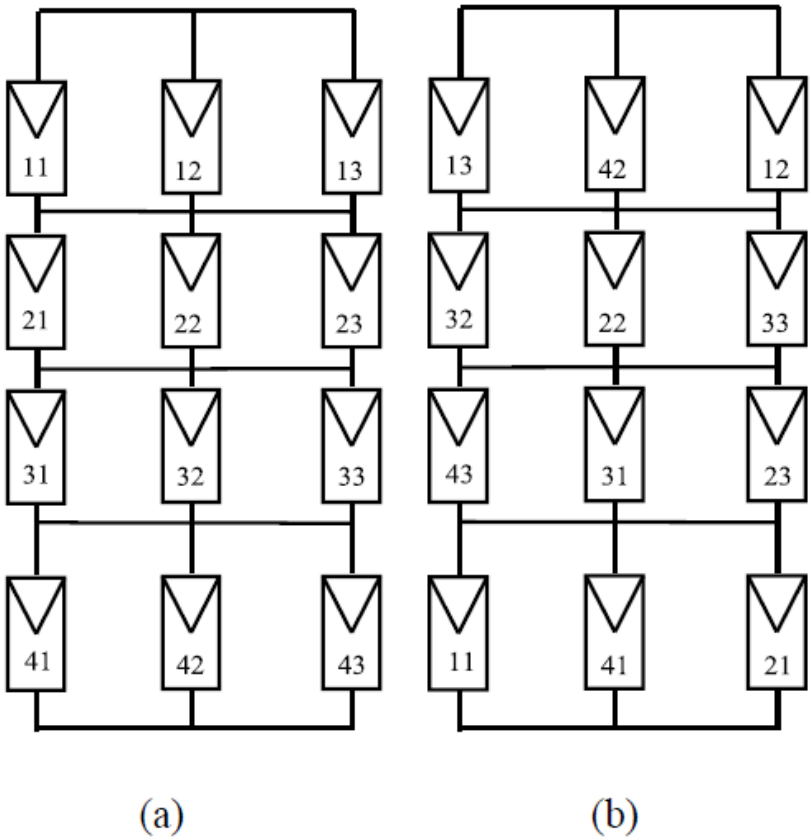

Figure 4.7: (a) TCT interconnection; (b) OTCT interconnection

4.7.1.1 Situation (a)

The comparison results for this situation are given in Table 4.1. SP and TCT interconnections suffer from partial shading losses caused by lack of coherence between the modules` MPPs and the array's MPP. The array's MPP (552 W) occurs when the modules are not at their MPPs. The MPP for the 1000 W/m^2 modules is 85 W and the MPP for the 500W/m^2 modules is 42.2W. However, for OTCT interconnection, the array's MPP (718 W) has more coherence with the modules' MPPs. This coherence is reflected in the array's performance ratio for this partial shading situation, which has increased from 0.72 for SP and TCT to 0.94 for OTCT. The higher coherence is also reflected in the output power which has increased by 30% with respect to those of SP and TCT. Figure 4.6 shows that the Power-Voltage (P-V) characteristic of OTCT interconnection is smoother than those of SP and TCT interconnections, which reduces the probability of the MPPT getting misled.

Table 4.1 : Situation (a) simulation results

	Modules' powers at $MPPA_a$ (W)			$MMPA_a$ (W)	PR_a	Power change w.r.t. SP (%)
SP&TCT	51	51	51	522	0.72	- - -
	51	51	51			
	41	41	41			
	41	41	41			
OTCT	76	76	76	718	0.94	+30
	76	84	84			
	41	41	41			
	41	41	41			

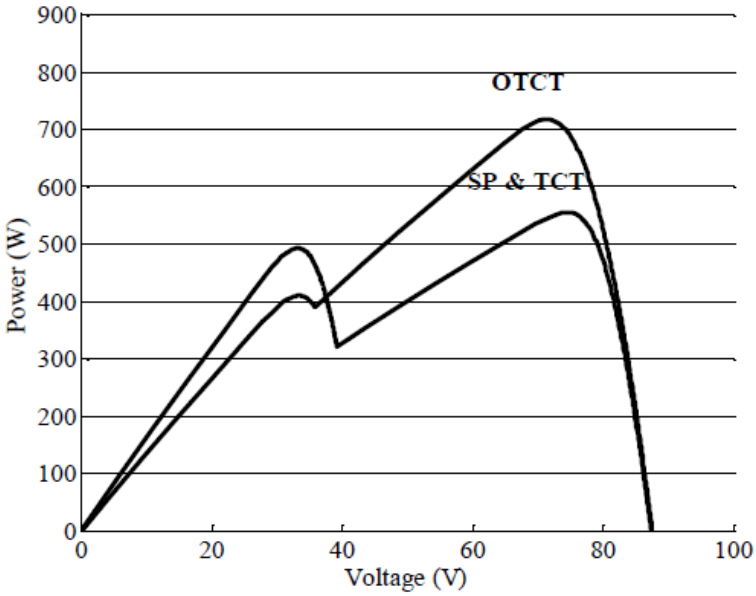

Figure 4.8 : situation (a) interconnections' P-V characteristics

4.7.1.2 Situation (b)

In this situation, SP and TCT suffer from partial shading losses caused by turning ON of some bypass diodes. These diodes bypass the 500 W/m^2 modules, thus eliminating any power produced by them. Moreover, the ON resistance for these diodes has a power loss of 3.1 W, as shown in Table 4.2. In the case of OTCT, bypass diodes are OFF; therefore, the 500 W/m^2 modules are still producing power.

The impact of OTCT interconnection is increasing the performance ratio from 0.85 to 0.975, improving the generated power by 15.1 % and smoothing the P-V characteristic, as shown in Figure 4.8.

Table 4.2: Situation (b) simulation results

	Modules' powers at $MPPA_b$ (W)			$MMPA_b$ (W)	PR_b	Power change w.r.t. SP (%)
SP & TCT	85	85	85	755.7	0.85	- - -
	85	85	85			
	85	85	85			
	-3.1	-3.1	-3.1			
OTCT	85	85	85	870	0.975	+15.1
	85	78	85			
	85	78	78			
	42	42	42			

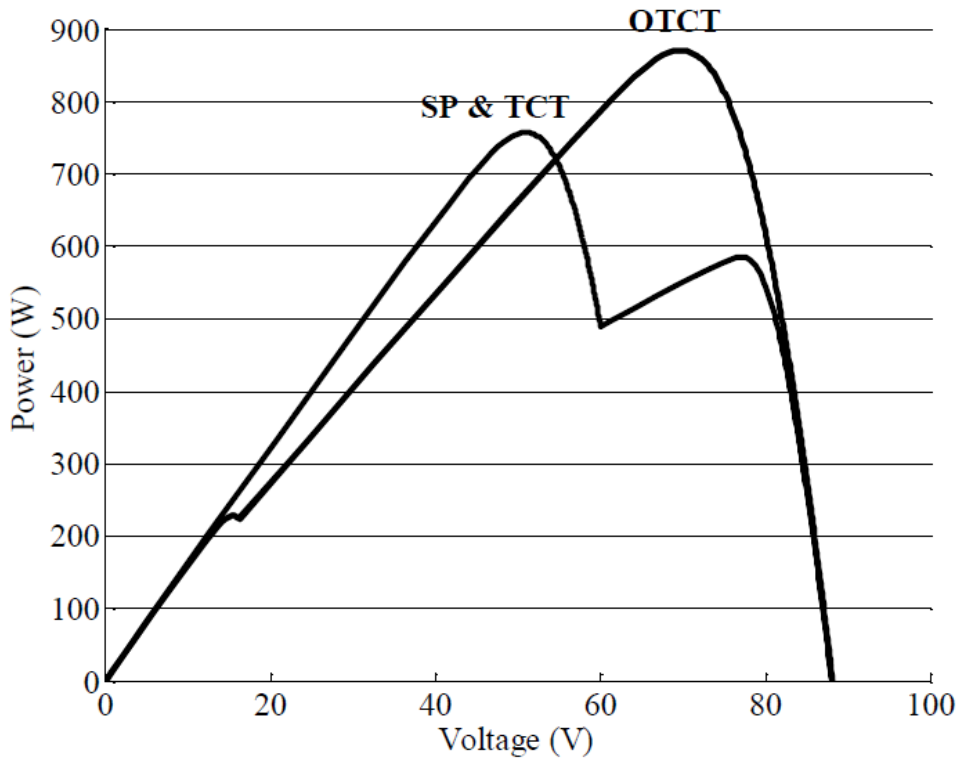

Figure 4.9 : Situation (b) interconnections' P-V characteristics

4.7.1.1 Situation (c)

In this situation, TCT has lower partial shading losses than SP because it has more coherence between modules' MPPs and array's MPP. TCT can have better coherence than SP only when the rows are partially shaded; otherwise, there is no significant difference. However, OTCT interconnection can have better coherence than SP and TCT in case of rows partial shading or full shading, as shown in the previous situations and Table 4.3. In this situation, the OTCT interconnection is able to reduce partial shading losses to zero, thus gaining a unity performance ratio. Moreover, its P-V characteristic has one peak only, as shown in Figure 4-9, thus simplifying the job of MPPT.

From the previous situations and using (4.9), the OTCT interconnection increases the annual energy yield during partial shading by 21%, when compared to SP, and by 19%, when compared to TCT.Moreover, using (4.8), (4.9) and (4.10), the PR during partial shading for OTCT increases to 0.97 from 0.8 for SP and 0.81 for TCT.

Table 4.3 : Situation (c) simulation results

	Modules' powers at $MPPA_c$ (W)			**$MMPA_c$ (W)**	**PR_c**	**Power change w.r.t. SP (%)**
SP	52	52	84.3	700	0.824	- - -
	52	52	84.3			
	38.7	38.7	84.3			
	38.7	38.7	84.3			
TCT	66.3	66.3	66.3	731	0.86	+4.4
	66.3	66.3	66.3			
	41.3	41.3	84			
	41.3	41.3	84			
OTCT	85	85	85	848.8	1.00	+21.3
	85	85	85			
	42.2	42.2	85			
	42.2	42.2	85			

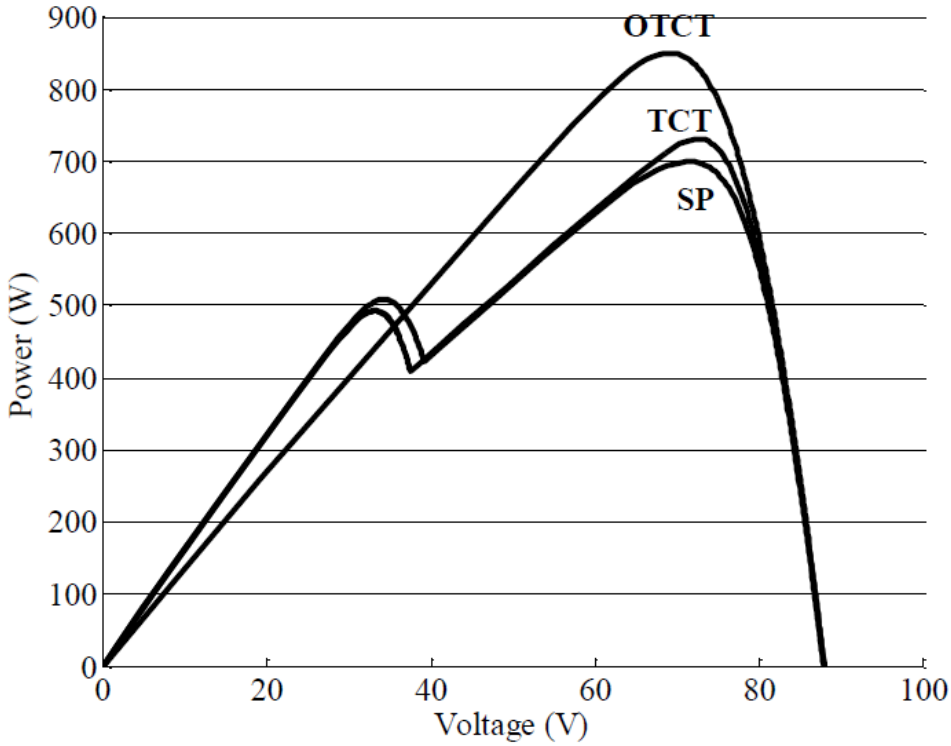

Figure 4.10: Situation (c) interconnections' P-V characteristics

4.7.2 Application Example 2

In this application example, the irradiance level of the shaded modules is 25% of that of the un-shaded ones, as shown in Figure 4.10. The static OTCT interconnection is found using the optimization model. The solution of the model gives the interconnection shown in Figure 4.11 (b) which is a modified version of the TCT interconnection of Figure 4.11 (a).

1000	1000	1000
1000	1000	1000
250	250	250
250	250	250

(a)

1000	1000	1000
1000	1000	1000
1000	1000	1000
250	250	250

(b)

1000	1000	1000
1000	1000	1000
250	250	1000
250	250	1000

(c)

Figure 4.11 : Three partial shading situations

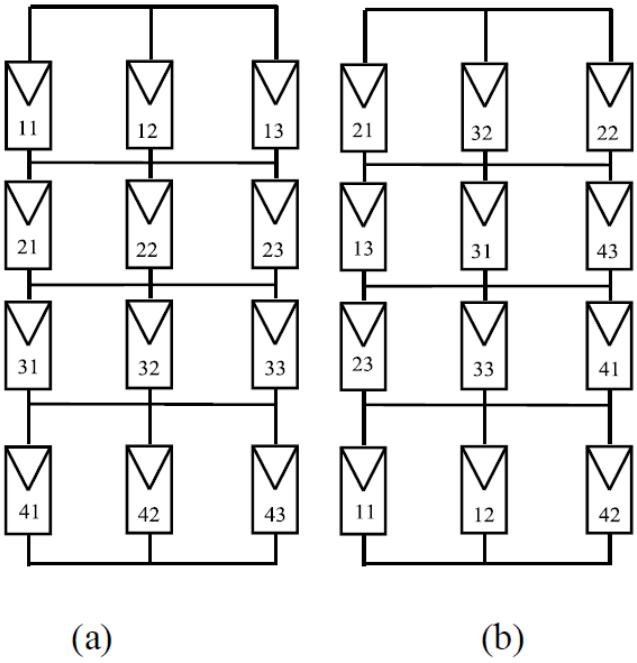

Figure4.12: (a) TCT interconnection; (b) OTCT interconnection

4.7.2.1 Situation (a)

In this situation, OTCT interconnection does not cause the bypass diodes to be turned ON. This increases the generated power by 7.1 % when compared to those for SP or TCT, as shown in Table 4.4. Moreover, the P-V characteristic is smoother, as shown in Figure 4.12.

Table 4.4: Situation (a) simulation results

	Modules' powers at $MPPA_a$ (W)			**$MMPA_a$ (W)**	**PR_a**	**Power change w.r.t. SP (%)**
SP & TCT	85	85	85	491.4	0.77	- - -
	85	85	85			
	-3.1	-3.1	-3.1			
	-3.1	-3.1	-3.1			
OTCT	66.7	66.7	83.5	870	0.83	+7.1
	66.7	66.7	83.5			
	19.1	13.6	13.6			
	13.6	19.1	13.6			

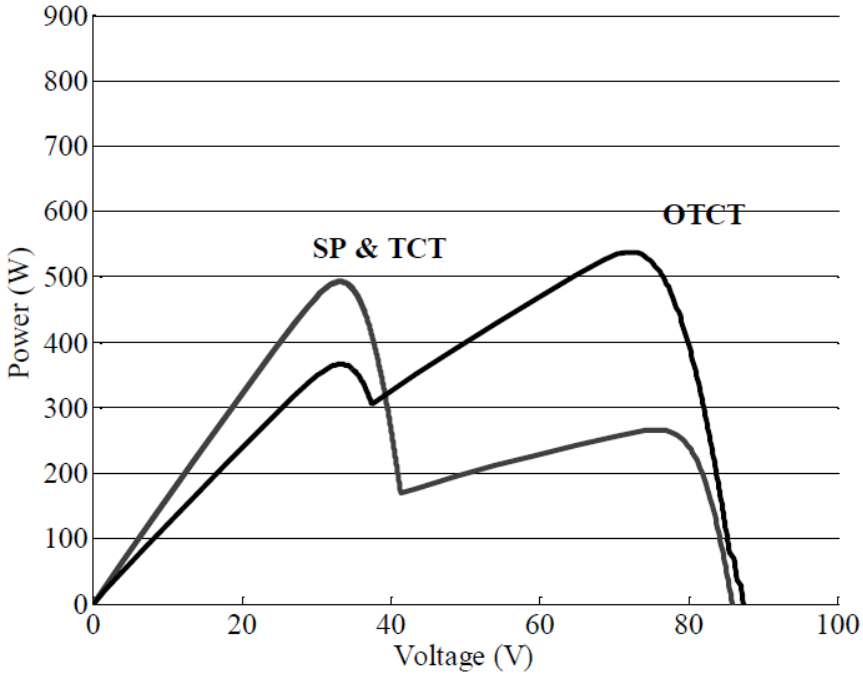

Figure 4.13 : situation (a) interconnections' P-V characteristics

4.7.2.2 Situation (b)

In this situation, the OTCT interconnection increased the performance ratio from 0.91 to 0.95, as shown in Table 4.5 and smoothed the P-V characteristic, as shown in Figure 4.13. This improvement comes from keeping the bypass diodes OFF.

Table4.5 : Situation (b), simulation results

	Modules' powers at $MPPA_b$ (W)			$MMPA_b$ (W)	PR_b	Power change w.r.t. SP (%)
SP & TCT	85	85	85	755.7	0.85	- - -
	85	85	85			
	85	85	85			
	-3.1	-3.1	-3.1			
OTCT	84.8	84.8	84.8	783.9	0.95	+3.7
	72.2	72.2	84.8			
	84.8	72.2	84.8			
	19.5	19.5	19.5			

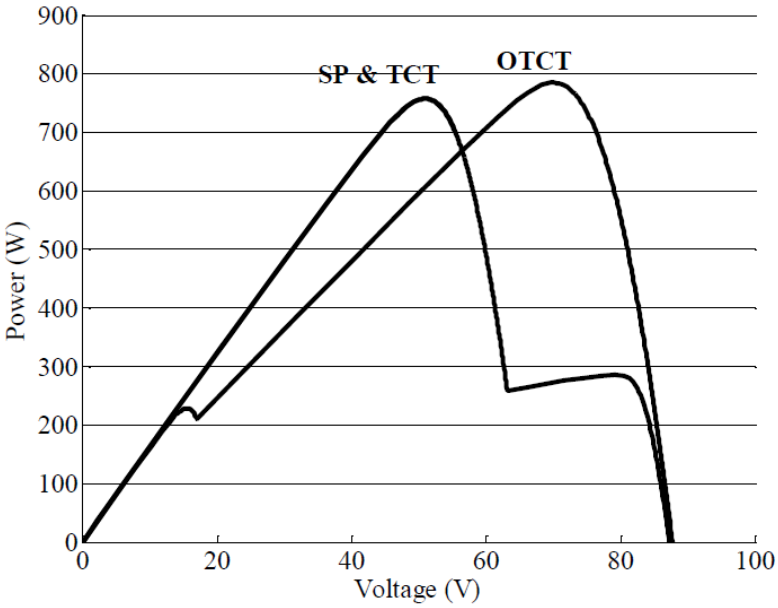

Figure 4.14 : situation (b) interconnections' P-V characteristics

4.7.2.3 Situation (c)

In this situation, the OTCT increased the coherence between the PV modules when compared to TCT or SP, as shown in Table 4.6. The increased coherence resulted in having a unity performance ratio for OTCT and increasing the generated power by 48 % when compared to SP. Moreover, the P-V characteristic has one peak only, as shown in Figure 4.14.

Table 4.6 : Situation (c) simulation results

	Modules' powers at $MPPA_c$ (W)			$MMPA_c$ (W)	PR_c	Power change w.r.t. SP (%)
SP	26.1	26.1	85.1	510	0.67	- - -
	26.1	26.1	85.1			
	16.3	16.3	85.1			
	16.3	16.3	85.1			
TCT	51.1	51.1	51.1	549.6	0.72	+7.8
	51.1	51.1	51.1			
	19.1	19.1	83.3			
	19.1	19.1	83.3			
OTCT	85.1	85.1	85.1	759.2	1.00	+48.9
	85.1	85.1	85.1			
	19.6	19.6	85.1			
	19.6	19.6	85.1			

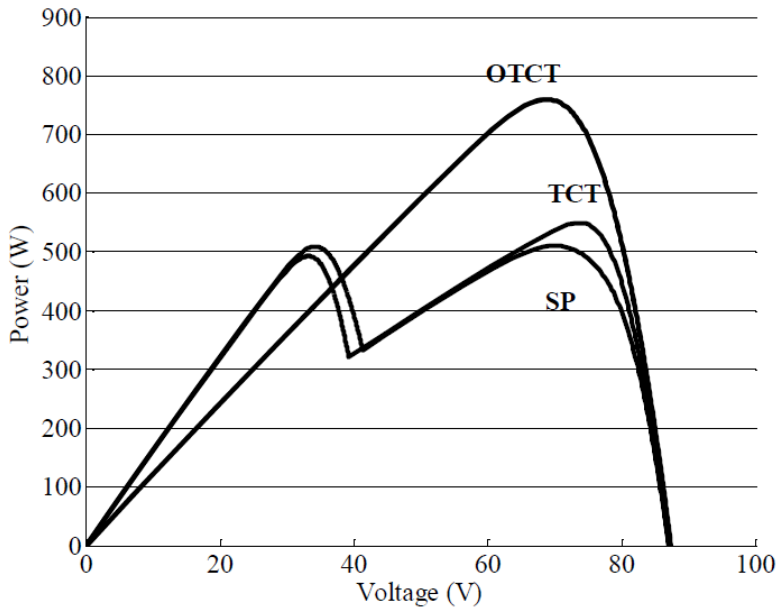

Figure 4.15 : situation (c) interconnections' P-V characteristics

From the previous situations and using (9), the OTCT interconnection increases the annual energy yield during partial shading by 17.8 % when compared to SP and by 15.2% when compared to TCT. Moreover, using (4.8), (4.9) and (4.10), the PR during partial shading for OTCT increases to 0.93 from 0.79 for SP and 0.81 for TCT. The application examples presented in this section indicate that the OTCT interconnection results in an increase in the annual energy in the presence of partial shading; however, it will increase the complexity of the interconnection. The extent of increase in the complexity depends on the specific situation. It should be noted that the proposed mathematical model is general and gives the OTCT interconnection when the information on the shading pattern, irradiance levels and duration of each partial shading situation is provided.

4.8 CONCLUSION

This chapter proposed the Optimal-Total-Cross-Tied (OTCT) interconnection for photovoltaic arrays. As verified by a number of application case studies, this interconnection is capable of significantly reducing mismatch losses caused by easy-to-predict sources when compared to Series-Parallel (SP) or Total-Cross-Tied (TCT) interconnections, without using any switches or sensors. This reduction is a significant improvement in the design of photovoltaic structures, and is especially

useful in the planning stage for large photovoltaic farms. The OTCT interconnection also results in a smoother array P-V characteristic with lower number of local maxima, thus simplifying the task of MPPT. Since the formulation of the optimization problem is general, the improvements are not restricted to the application case studies considered and are valid for any general condition.

CHAPTER 5

OPTIMAL PHOTOVOLTAIC ARRAY RECONFIGURATION TO REDUCE PARTIAL SHADING LOSSES

5.1 INTRODUCTION

Sources of partial shading could be easy-to-predict sources such as nearby arrays and trees, or difficult-to-predict sources such as clouds, dust and snow. Unlike partial shading resulting from difficult-to-predict sources, partial shading caused by easy-to-predict sources can be reduced by selecting the proper array interconnection, as mentioned in the previous chapter. For example, partial shading from neighboring arrays in PV farms can be reduced by connecting the array in Optimal-Total-Cross-Tied (OTCT) interconnection.

The main goal of this chapter is to develop a mathematical formulation for the optimal PV array reconfiguration to reduce partial shading losses that come from difficult-to-predict sources. The second goal is to find the optimal solution for the optimization problem using a global optimization technique. This chapter is organized as follows: First, the mechanisms of partial shading losses are discussed. Then, a literature survey on techniques for reduction of partial shading losses is reported. Next, the reconfiguration problem and its optimal solution algorithm are presented. Finally, some applications for the proposed formulation are discussed, followed by conclusions and proposed future work.

5.2 CLOUDS MOVEMENT

The passage of clouds over a PV array is one of the main reasons for partial shading. There are two main cloud patterns. The puffy clouds that look like large cotton balls which are called cumulus clouds and the solid line of black clouds which are called squall lines. Cumulus clouds do not reduce the irradiance levels greatly; however they can cause the irradiance levels to fluctuate greatly. Squall lines cause the largest variations in the irradiance levels and they can cause zero irradiance level, and thus, they lead to the worst-case scenario for partial shading; however, the speed of

fluctuations is less than squall lines. The speed of fluctuations can range from few minutes to hours depending on the wind speed and the type and size of passing clouds.

5.3 PARTIAL SHADING LOSSES

Partial Shading (PS) causes power losses through different mechanisms, the most severe one being the incoherence of array's Maximum Power Point (MPP) with modules' MPPs. This means that the MPP operation of the array does not coincide with the MPP operations of the individual modules; therefore, the overall operation is not optimal. Another mechanism is turning bypass diodes ON, bypassing partially-shaded modules, although they might still be able to generate power. Moreover, turning these diodes ON creates losses due their ON-state resistances. PS could also cause reverse currents which make the reversed modules to act as loads, thus reducing the generation and increasing the thermal losses. In addition to the previous mechanisms, PS increases the probability of Maximum Power Point Tracker (MPPT) being misled to operate at local maxima which can add to the losses. Different losses caused by PS are illustrated in Figure 5.1, where the maximum possible power under PS is the sum of the maximum powers of the individual modules when operating independently under the same irradiance levels dictated by array PS. The maximum possible power is less than the array's maximum power without partial shading. The difference is the shading losses which cannot be avoided.

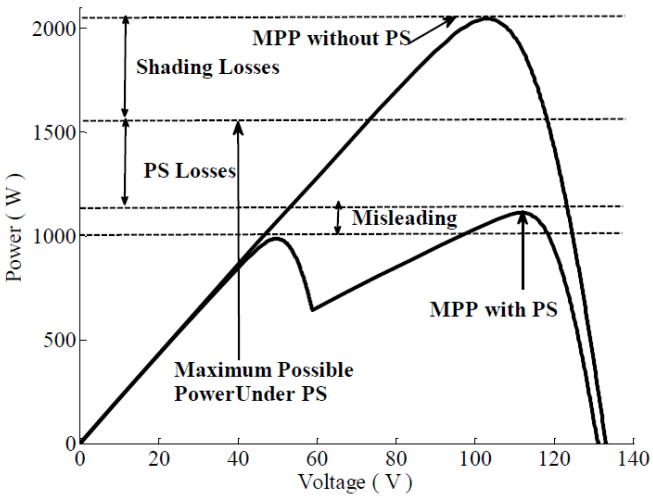

Figure 5.1: Shading, partial shading and misleading losses for a photovoltaic array

5.4 PARTIAL SHADING LOSS REDUCTION

PS losses could be reduced by either passive or active techniques. Passive techniques use passive elements such as bypass diodes while active techniques use active elements such as solid-state switches. The most common passive technique uses bypass diodes across PV modules to reduce partial shading losses. These diodes protect the modules from local heating (hot spots) and increase the overall power generation from the array under partial shading conditions. However, theses diodes do not allow the array to produce the maximum possible power under partial shading. Moreover, they increase the complexity of MPPT, as discussed earlier. Another passive technique is based on changing PV array interconnections. Active techniques for reducing partial shading losses could be grouped into the following main three categories:

5.4.1 Distributed MPPT

In this technique, each module or group of modules has its own MPPT, thus avoiding PS losses caused by the incoherence between the modules. Also, this technique avoids the installation of bypass diodes, thus avoiding the corresponding losses. Moreover, the MPPT detection is easier and does not require complicated algorithms. However, this technique requires additional components for each module or group of modules, such as DC-DC or DC-AC converters. Moreover, it requires more complicated control architectures.

5.4.2 Multi-level inverters

Multi-level inverter topologies such as diode-clamped, capacitor clamped and cascaded H-bridge have been used to reduce PS losses by independent voltage control of each module. These inverters reduce the device voltage stress as well as the ac output voltage harmonics. However, they require a complicated control algorithm to achieve operation at the optimal power point.

5.4.3 Photovoltaic array reconfiguration

The reconfigurable PV array was first proposed by Salameh et al. to start and operate permanent magnet dc motor coupled to volumetric water pump (Z.M.

Salameh *et al*., 1990). Then, it was proposed (Y. Auttawaitkul *et al*., 1998) to start and accelerate electric cars using a number of PV modules. Sherif and Boutros proposed a reconfiguration scheme for PV modules using transistors as switches between cells. Nguyen and Lehman used reconfiguration inside PV arrays and proposed two reconfiguration algorithms. However, they did not propose any mathematical formulation for the optimal reconfiguration. They also proposed dividing the PV array into fixed and adaptive parts with a switching matrix between them. They used one column only as an adaptive part in order to reduce the number of sensors and switches, which can make the scheme ineffective if the shaded area is large. Moreover, they did not mention the necessary modifications in their algorithms to deal with higher number of reconfigurable columns. They tested the system under constant resistive load without MPPT. Velasco et al. used reconfiguration for grid connected PV arrays and proposed a mathematical formulation for it. However, the formulation is for a fully reconfigurable array only and it does not indicate directly the global optimal reconfiguration. Moreover, they proposed the irradiance equalization index as the difference between the maximum and the minimum average row irradiance levels in the array. They claimed that minimization of this index could result in an optimal reconfiguration. However, optimal reconfiguration requires that all the differences between row irradiance levels are minimized, as will be shown in this chapter. They proposed a solution algorithm that required an off-line determination of all possible configurations of the PV modules. Then, the best configuration for the current shading condition was found on-line. They tested the system using six PV modules and identified 15 possible configurations. Also, they found that nine PV modules will have 280 possible configurations. The number of possible configurations will increase for larger PV arrays and it will be very difficult to find the optimal configuration in a timely manner. It can be concluded that the proposed algorithm (Velasco-Quesada *et al*., 2009) is more suitable for small number of PV modules.

The formulation proposed is this chapter is intended to cover the shortfalls in the past work in the area. It can find directly the optimal reconfiguration if solved by a global optimization technique. Moreover, it is suitable for a fully reconfigurable or a partially reconfigurable array. In addition, it can be used for arrays with different number of modules per row. The solution algorithm proposed in this chapter ensures a global optimal reconfiguration.

5.5 OPTIMAL PV ARRAY RECONFIGURATION

By dynamically reconfiguring the connection of PV modules, the effect of irradiance level mismatch between PV modules can be minimized on the row level. For Total-Cross-Tied (TCT) interconnection, this can be seen as having one column of PV modules with equal or close-to-equal irradiance levels. The definition of irradiance level mismatch index is as follows:

Definition 1 "Irradiance level Mismatch Index IMI" is the sum of the squares of differences between normalized total irradiance levels of rows, as given by (5.1).

$$IMI = 0.5\sum_{i=1}^{m}\sum_{l=1}^{m}\left[\frac{IRR_i}{G} - \frac{IRR_l}{G}\right]^2 \tag{5.1}$$

In (5.1), IRR_i and IRR_l are the total irradiance levels of rows i and l, respectively. Figure 5.2 shows an m×n PV array composed of two parts, a fixed part and a reconfigurable part. The objective is toreconfigure the modules in the reconfigurable part in such a way that IMI is minimized. This requires defining an existence variable as follows.

Definition 2 "Existence Variable y_{iq}" is defined as a binary variable such that:

$$y_{ijq} = \begin{cases} 1 & \text{if module q exist at position ij} \\ 0 & \text{otherwise} \end{cases}$$

The objective function can therefore be formulated as follows.

$$Minimize\left(IMI = 0.5\sum_{i=1}^{m}\sum_{l=1}^{m}\left[\frac{IRF_i}{G} + \sum_{q=1}^{mn_R}\frac{IRM_q y_{iq}}{G} - \frac{IRF_i}{G} - \sum_{q=1}^{mn_R}\frac{IRM_q y_{lq}}{G}\right]^2\right) \tag{5.2}$$

In (5.2), the total normalized irradiance level of each row is represented by the summation of the normalized irradiance level of the fixed part $\frac{IRF_i}{G}$and the normalized irradiance level of the reconfigurable part$\sum_{q=1}^{mn_R}\frac{IRM_q y_{iq}}{G}$. In (5.2), IRF_i represents the total irradiance level of the fixed part of row i, IRM_q represents the irradiance level of the reconfigurable module q, G is the reference irradiance level, m the total number of rows and n_R the total number of reconfigurable columns. The irradiance level of the reconfigurable part is found by the summation of irradiance levels of all modules that exist in the reconfigurable part. A module q will exist in

the reconfigurable part if and only if y_{iq} is equal to one. Equations (5.3) and (5.4) give two logical constrains for the optimal reconfiguration problem. The first constrain described by (5.3) states that all reconfigurable modules should exist. This constraint is repeated m × n_R times. The second constraint described by (5.4) states that each reconfigurable part in each row will have n_R modules or less. This constraint is repeated m times. The inequality (5.4) could be changed to equality for exactly n_R modules per row.

$$\sum_{i=1}^{m} y_{iq} = 1 \qquad \forall q \tag{5.3}$$

$$\sum_{q=1}^{mxn_R} y_{iq} \leq n_R \qquad \forall i \tag{5.4}$$

The previous optimization model can be used for fully- reconfigurable arrays if IRF_i is set to zero, or partially-reconfigurable arrays otherwise. Also, it can be used for different number of modules per row if (5.4) is an inequality constraint. The proposed model requires irradiance level data only and does not require any knowledge about the model of the PV modules.

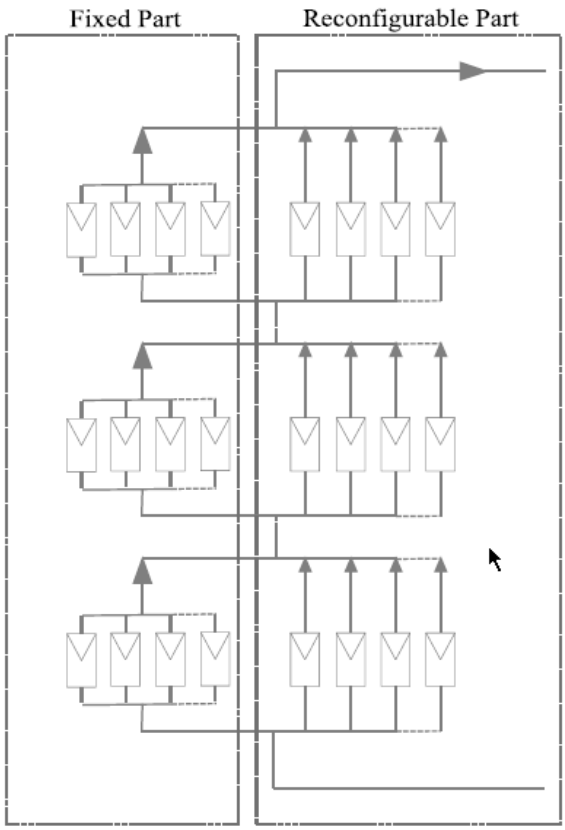

Figure 5.2: Reconfigurable PV array

5.6 SWITCHES AND SENSORS REQUIREMENTS

The proposed formulation requires a double-pole m-throw switch for each reconfigurable module as shown in Fig. 5.3. Therefore, the required total number of switches is $m \times n_R$. This number can be reduced by reducing the number of rows or the number of reconfigurable columns. The minimum number of rows is limited by the required voltage level from the array. However, the number of reconfigurable columns can be reduced by proper selection of the position of the reconfigurable columns. The users have the flexibility to select the number and the locations of reconfigurable columns according to their needs and according to the patterns of partial shading they have. Moreover, the users have the flexibility to select the number of modules per row according to their needs.

Irradiance levels can be measured by irradiance level sensors or estimated using voltage and current measurements. The cost of irradiance level sensors is much higher than those of voltage and current sensors. Therefore, it is proposed to use a voltage sensor for each row and a current sensor for eachmodule; then, the total number of sensors is $m \times (1+n_f+n_R)$. The irradiance level of each module IRM can be estimated by measuring its voltage VM and its current IM and substituting in (5.5) which requires the knowledge of module's parameters that could change by aging.

$$IRM = \frac{G}{I_{SC}}\left[I_o\left(e^{\frac{\frac{VM}{N_S}+R_S IM}{V_T}} - 1\right) + \frac{\frac{VM}{N_S}+R_S IM}{R_P} - IM\right] \tag{5.5}$$

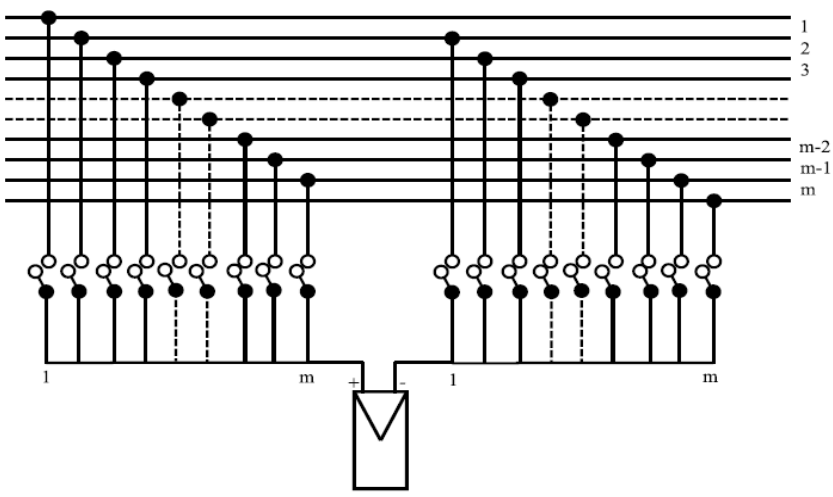

Figure 5.3: A reconfigurable PV module requires a double-pole m-throw switch

5.7 OPTIMIZATION ALGORITHM AND SIMULATION MODEL

The optimal reconfiguration problem is a Mixed Integer Quadratic Programming (MIQP) problem with $m^2 \times n_R$ binary variables. MIQP problems are NP-hard problems and their computational complexity is exponential in the number of binary variables. However, a lot of efforts have been made to develop real time solvers for these problems. These solvers usually use Branch and Bound (BB) algorithm. These solvers usually solve the problem in the range of 100 milliseconds which is much faster than the speed of fluctuation of irradiance levels which ranges from few minutes to hours.

5.8 PERFORMANCE RATIO AND ECONOMICAL EVALUATION METHOD

The array's overall Performance Ratio (PR) given by (5.6) normalizes the effect of partial shading losses based on the rated output dc power P_{dc}, and allows comparison between arrays of different sizes under different irradiance conditions HA (B. Marion*et al.*, 2005).

$$PR = \frac{EA}{HA} \times \frac{G}{P_{dc}} \tag{5.6}$$

The array's energy production under partial shading (EA) and its in-plane irradiance level during partial shading (HA) used in (5.6) are given by (5.7) and (5.8) respectively.

$$EA = PA \times t \tag{5.7}$$

$$HA = IRA \times t \tag{5.8}$$

wheret is the duration of partial shading. The array's PR can be found as follows:

$$PR = \frac{PA \times t}{IRA \times t} \times \frac{G}{P_{dc}} = \frac{PA}{IRA} \times \frac{G}{P_{dc}} \tag{5.9}$$

The Revenue Present Value (RPV) from recovering partial shading energy losses is given by (5.10), where F is the inflation rate, D is the discount rate, ΔPA_{gk} is the change in array output dc power due to reconfiguration, t_{gk} is the duration of partial shading situation, CE is the negotiated contract price, Y is the array life time in years, N is the number of partial shading situations per year, g is partial shading

situation index and k is year index. The Cost Present Value (CPV) is given by (5.11), where N_{sw} is the total number of switches, NI is the total number of current sensors, NV is the total number of voltage sensors, a is the switch cost, b is the current sensor cost, c the voltage sensor cost and d cost of controller. The Net Present Value is given in (5.12).

$$RPV = \sum_{k=1}^{Y} \sum_{g=1}^{N} \left[\frac{(\Delta PA_{gk} t_{gk})(1+F)^{k-1}}{(1+D)^{k}} \right] CE \tag{5.10}$$

$$CPV = aN_{SW} + bN_{I} + cN_{V} + d \tag{5.11}$$

$$NPV = RPV - CPV \tag{5.12}$$

5.9 APPLICATION EXAMPLES

The following application examples consider a 6 × 4 PV array, where the first and third columns are fixed and the second and fourth columns are reconfigurable to form a Half-Reconfigurable Photovoltaic Array (HRPVA). This reduces the required number of switches to half of what was proposed (Velasco-Quesada*et al.*, 2009) for Fully-Reconfigurable Photovoltaic Array (FRPVA). However, this results in reduction of the generated power in some partial shading situations.

A simulation model is needed to compare HRPVA, FRPVA and TCT arrays. The simulation model is built in MATLAB/Simulink environment. This model is based on the single diode model for PVmodules described by (4.5) and shown in Fig. 4.3. The PV array is constructed from the interconnection of PV modules in HRPVA, FRPVA or TCT. A bypass diode is connected across each PV module and no reverse current blocking diodes are modeled. The PV module data is given in Appendix A. The optimization software is installed on a PC, which has an Intel Core i5 processor with a speed of 2.40 GHz and a RAM memory of 4 GB. Performance ratio and irradiance mismatch index are calculated for each application example to give an indication of partial shading losses. Moreover, the processing time required to solve the optimization problem in each example is given.

5.9.1 Application Example 1: Single-Row Shading

The PS situations shown in Figure 5.4 are applied to TCT, HRPVA and FRPVA arrays, where the numbers indicate modules' irradiance levels in W/m^2. It should be noted that the MPP for the modules receiving 1000 W/m^2 irradiance level is 85 W and for those receiving 500 W/m^2 is 42.2W.

1000	1000	1000	1000
1000	1000	1000	1000
1000	1000	1000	1000
1000	1000	1000	1000
1000	1000	1000	1000
500	500	500	500

(a)

1000	1000	1000	500
1000	1000	1000	1000
1000	1000	1000	1000
1000	1000	1000	1000
1000	500	1000	1000
500	1000	500	1000

(b)

1000	1000	1000	500
1000	1000	1000	1000
1000	1000	1000	1000
1000	1000	500	1000
1000	500	1000	1000
500	1000	1000	1000

(c)

Figure 5.4: Application Example 1: (a) TCT irradiance levels; (b) HRPVA effective irradiance levels;(c) FRPVA effective irradiance levels

Table 5.1 : Application Example 1: Array and modules' powers

	Modules' powers at Array's MPP (W)				Array's MPP(W)	PR	IMI	Power change w.r.t. TCT (%)	T (s)
TCT	85	85	85	85	1691	0.9		- -	-
	85	85	85	85					
	85	85	85	85					
	85	85	85	85					
	85	85	85	85					
	-3.1	-3.1	-3.1	-3.1					
HRPVA	81.5	81.5	81.5	41.5	1700	0.91		+0.5	13.6
	74.4	74.4	74.4	74.4					
	74.4	74.4	74.4	74.4					
	74.4	74.4	74.4	74.4					
	81.5	41.5	81.5	81.5					
	38.2	78.4	38.2	78.4					
FRPVA	84.9	84.9	84.9	41.8	1834	0.98	2	+8.5	18.5
	81.1	81.1	81.1	81.1					
	81.1	81.1	81.1	81.1					
	84.9	84.9	41.8	84.9					
	84.9	41.8	84.9	84.9					
	41.8	84.9	84.9	84.9					

The FRPVA has increased the generated power by 8.5% when compared to TCT. This increase comes from preventing bypass diodes from turning ON, which would short the 500 W/m^2 modules, as shown in Table 1. The HRPVA has increased the generated power by only 0.5%. However, the Power-Voltage (P-V) characteristic is smoother than that of TCT, as shown in Figure 5.5, which reduces the probability of misleading the MPPT. The optimization processing time is 13.6 sec for HRPVA and 18.5 sec for FRPVA.

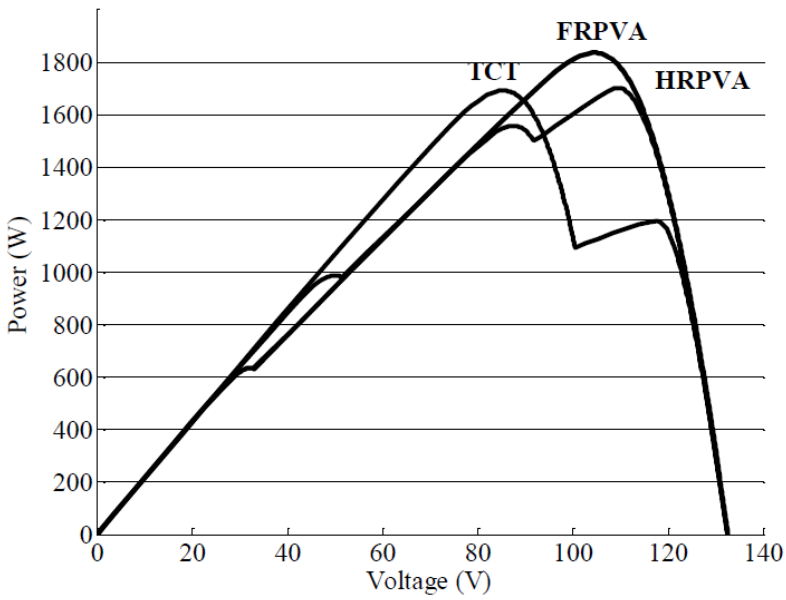

Figure 5.5: Application Example 1: Arrays' P-V characteristics

5.9.2 Application Example 2: Double-Row Shading

In this situation, the effective irradiance levels seen by each array is shown in Figure 5.6. The HRPVA and FPVA have reduced partial shading losses caused by turning ON of bypass diodes across the 500 W/m^2 modules, as shown in Table 5.2, thus increasing the generated power by 21.8 %, when compared to that for TCT. This is also reflected in the performance ratio which has increasedfrom 0.787 to 0.959 and the irradiance mismatch index which has decreased from 32 to 2. Moreover, the P-V characteristics of the reconfigurable arrays are smoother than that of TCT, as shown in Figure 5.7, thus reducing the probability of misleading the MPPT. The optimization processing time is 1.9 sec for HRPVA and 21.7 sec for FRPVA.

1000	1000	1000	1000
1000	1000	1000	1000
1000	1000	1000	1000
1000	1000	1000	1000
500	500	500	500
500	500	500	500

(a)

1000	1000	1000	500
1000	500	1000	1000
1000	500	1000	1000
1000	1000	1000	500
500	1000	500	1000
500	1000	500	1000

(b)

1000	1000	500	1000
1000	500	1000	1000
1000	500	1000	500
500	1000	1000	1000
500	1000	500	1000
1000	500	1000	1000

(c)

Figure 5.6: Application Example 2: (a) Applied irradiance levels; (b) HRPVA effective irradiance levels; (c) FRPVA effective irradiance levels

Table 5.2 : Application Example 2: Array and modules' powers

	Modules' powers at Array's MPP (W)				Array's MPP(W)	PR	IMI	Power change w.r.t. TCT (%)	T(s)
TCT	85	85	85	85	1338	0.787	32	- -	-
	85	85	85	85					
	85	85	85	85					
	85	85	85	85					
	-3.1	-3.1	-3.1	-3.1					
	-3.1	-3.1	-3.1	-3.1					
HRPVA	80.8	80.8	80.8	41.2	1630	0.959	2	+21.8	1.9
	80.8	41.2	80.8	80.8					
	80.8	41.2	80.8	80.8					
	80.8	80.8	80.8	41.2					
	40.6	83.1	40.6	83.1					
	40.6	83.1	40.6	83.1					
FRPVA	80.8	80.8	41.2	80.8	1630	0.959	2	+21.8	21.7
	80.8	41.2	80.8	80.8					
	83.1	40.6	83.1	40.6					
	41.2	80.8	80.8	80.8					
	40.6	83.1	40.6	83.1					
	80.8	41.2	80.8	80.8					

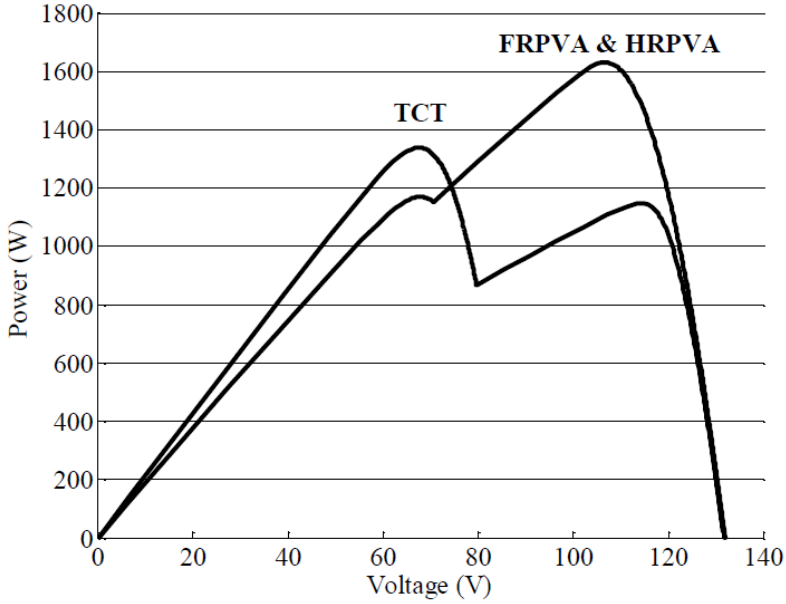

Figure 5.7: Application Example 2: Arrays' P-V characteristics

5.9.3 Application Example 3: Quarter-Array Shading

The irradiance levels shown in Figure 5.8 are applied to different PV arrays. The HRPVA and the FRPVA have reduced partial shading losses caused by incoherence between the modules' MPPs and the array's MPP, as shown in Table 5.3. The 1000 W/m^2 module is now able to produce 85 W instead of 73.1 W and the 500 W/m^{2}module is able to produce 42.5 W instead of 41.2 W, increasing the overall array power production by 9.6%, when compared to that for TCT. The reconfigurable arrays have a unity performance ratio and zero irradiance mismatch index. The P-V characteristics of the reconfigurable arrays are smoother than that of TCT, as shown in Figure 5.9, which simplifies the task of MPPT algorithm. The optimization processing time is 0.7 sec for HRPVA and 1.6 sec for FRPVA.

1000	1000	1000	1000
1000	1000	1000	1000
1000	1000	1000	1000
500	500	1000	1000
500	500	1000	1000
500	500	1000	1000

(a)

1000	500	1000	1000
1000	500	1000	1000
1000	500	1000	1000
500	1000	1000	1000
500	1000	1000	1000
500	1000	1000	1000

(b)

1000	1000	500	1000
1000	500	1000	1000
1000	1000	1000	500
500	1000	1000	1000
1000	1000	500	1000
1000	500	1000	1000

(c)

Figure 5.8: Application Example 3: (a) Applied irradiance levels; (b) RPVA effectiveIrradiance levels ; (c) FRPVA effective irradiance levels

Table 5.3 : Application Example 3: Array and modules' powers

	Modules' powers at Array's MPP (W)				Array's MPP(W)	PR	IMI	Power change w.r.t. TCT (%)	T(s)
TCT	85	85	85	85	1630	0.913	9	- -	-
	85	85	85	85					
	85	85	85	85					
	85	85	85	85					
	-3.1	-3.1	-3.1	-3.1					
	-3.1	-3.1	-3.1	-3.1					
HRPVA	85	42.5	85	85	1786	1.000	0.00	+9.6	0.7
	85	42.5	85	85					
	85	42.5	85	85					
	42.5	85	85	85					
	42.5	85	85	85					
	42.5	85	85	85					
FRPVA	85	85	42.5	85	1786	1.000	0.00	+9.6	1.6
	85	42.5	85	85					
	85	85	85	42.5					
	42.5	85	85	85					
	85	85	42.5	85					
	85	42.5	85	85					

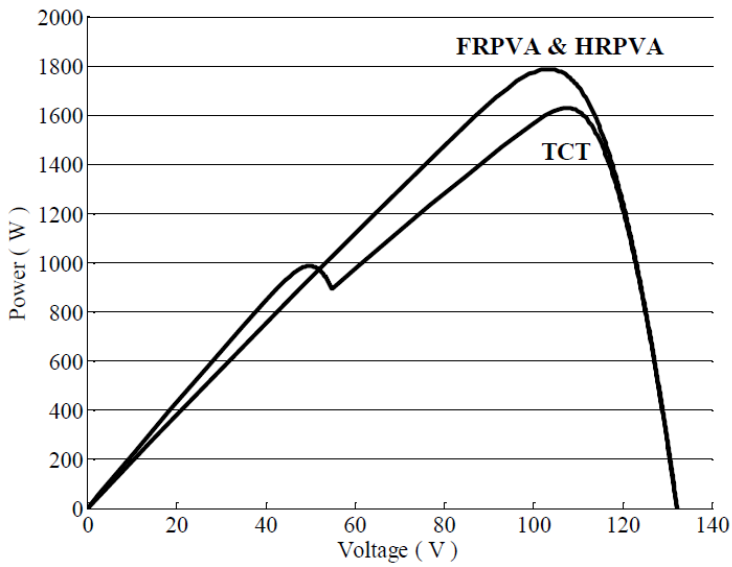

Figure 5.9 : Application Example 3: Arrays' P-V characteristics

5.9.4 Application Example 4: Oblique Shading

In this application, oblique shading is imposed on the three arrays, as shown in Figure 5.10. The reconfigurable arrays have increased the coherence between the modules' MPPs and the array's MPP which has increased the generated power by 23.3% for FRPVA and by 15.7% for HRPVA, as givenin Table 5.4 and shown in Figure 5.11. The optimization processing time is 7.1 sec for HRPVA and 1.6 sec for FRPVA.

1000	1000	1000	1000
1000	1000	1000	1000
1000	1000	1000	1000
500	1000	1000	1000
500	500	1000	1000
500	500	500	1000

(a)

1000	500	1000	1000
1000	1000	1000	1000
1000	500	1000	1000
500	1000	1000	1000
500	1000	1000	1000
500	1000	500	1000

(b)

1000	1000	500	1000
500	1000	1000	1000
1000	500	1000	1000
1000	1000	500	1000
1000	500	1000	1000
1000	500	500	1000

(c)

Figure 5.10: Application Example 4: (a) Applied irradiance levels; (b) RPVA effective irradiance levels ; (c) FRPVA effective irradiance levels

Table 5.4 Application Example 4: Array and modules' powers

	Modules' powers at Array's MPP (W)				Array's MPP(W)	PR	IMI	Power change w.r.t. TCT(%)	T (s)
TCT	63.8	63.8	63.8	63.8	1449	0.81	12	- -	-
	63.8	63.8	63.8	63.8					
	63.8	63.8	63.8	63.8					
	36.5	71	71	71					
	40.7	40.7	79.4	79.4					
	38.2	38.2	38.2	78.3					
HRPVA	81.4	41.5	81.4	81.4	1677	0.94	3	+15.7	7.1
	74.3	74.3	74.3	74.3					
	81.4	41.5	81.4	81.4					
	41.5	81.4	81.4	81.4					
	41.5	81.4	81.4	81.4					
	38-7	79.5	38.7	79.5					
FRPVA	85	85	42.5	85	1786	1.000	0.00	+23.3	1.6
	42.5	85	85	85					
	85	42.5	85	85					
	85	85	42.5	85					
	85	42.5	85	85					
	85	42.5	85	85					

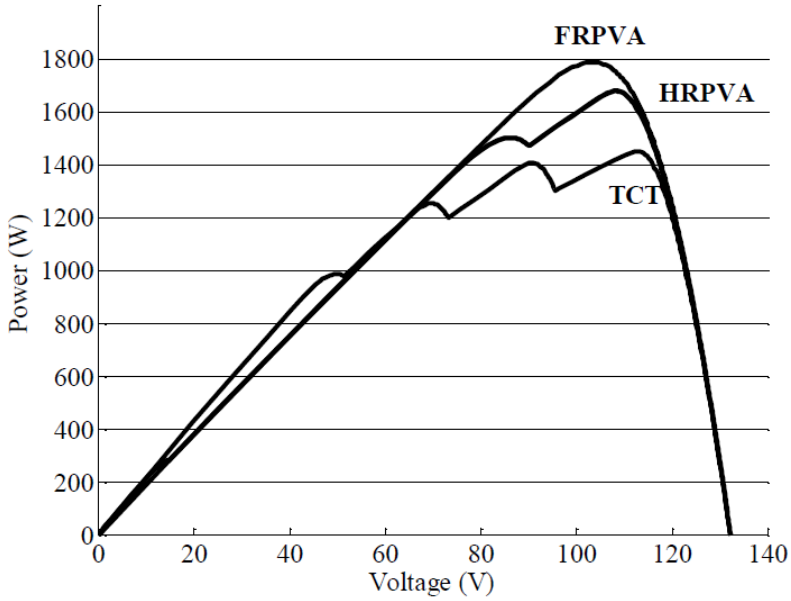

Figure 5.11: Application Example 4: Arrays' P-V characteristics

5.10 CONCLUSION

In this chapter, a mathematical formulation for photovoltaic array reconfiguration as a Mixed Integer Quadratic Programming problem was proposed. This formulation can be used for a fully reconfigurable or a partially reconfigurable array. Moreover, it can be used for non-equal number of modules per row. It was shown that the application of the proposed reconfiguration concept can result in considerable reduction in partial shading losses, thus increasing the generated output power of arrays. A useful byproduct is the smoother P-V characteristic for the array, making the MPPT task much simpler.

CHAPTER 6

CONCLUSION AND FUTURE WORK

Optimal photovoltaic array patterns are developed to reduce losses under partial shading conditions and the performance of the developed system is investigated using MATLAB based simulation software. The approached design is a passive design in which following conclusions are arrived.

1. The OTCT interconnections reduce partial shading losses and smooth the P-V characteristic, thus avoiding a complicated Maximum Power Point Tracking (MPPT) algorithm.

2. It reduces the possibility of turning ON bypass diodes; thus, they can be avoided in some situations. However, the OTCT interconnection increases the complexity of installation and it may require more labor time. Also, the OTCT interconnection may require additional wires to interconnect the modules.

3. The proposed design is meant to dynamically reconfigure the photovoltaic array in real time to reduce partial shading losses. The reconfigurable array reduces partial shading losses caused by difficult-to-predict sources such as clouds and snow.

4. It reduces the land and installation requirements in large photovoltaic farms. However, the reconfigurable array requires switches, sensors and controllers which add to the installation cost.

5. The adoption of this interconnection in PV arrays can reduce significantly mismatch losses caused by easy-to-predict sources in building-integrated-photovoltaic systems and photovoltaic farms and it allows for using a simple MPPT and avoiding bypass diodes in some situations. Moreover, it can reduce the land and installation requirements of photovoltaic farms.

6. The Reconfigurable photovoltaic arrays can significantly reduce partial shading losses caused by difficult-to-predict sources and it can reduce the land and installation requirements in photovoltaic farms. The proposed formulation

allows for partially reconfigurable arrays, thus reducing installation cost.

FUTURE SCOPE

The following items have been identified for future work based on the findings of this thesis:

1. Developing a simple method for making the connections in the OTCT interconnection to reduce installation time.
2. Developing an optimization model for the OTCT interconnection based on the double diode model.
3. Modeling the change in irradiance levels caused by clouds, snow and dust using random variables and Monte Carlo simulation.
4. Performing economic analysis on the reconfigurable photovoltaic array to find the most economical number of reconfigurable columns based on site survey and historical partial shading data.
5. Building a prototype experiment for the reconfigurable PV array.

REFERENCES

"IEEE Recommended Criteria for Terrestrial Photovoltaic Power Systems," *ANSI/IEEE Std 928-1986*, vol., no., pp.0_1, 1986.

Acciari G.,Graci D. and La Scala A., "Higher PV Module Efficiency by a Novel CBS Bypass," P*ower Electronics, IEEE Transactions on,* vol. 26, no.5, pp.1333-1336, May 2011.

B. Marion, J. Adelstein, K. Boyle , H. Hayden, B. Hammond, T. Fletcher, B. Canada, D.Narang, D.Shugar, H. Wenger, A.Kimber, L.Mitchell, G. Rich and T. Townsend, "Performance Parameters for Grid-connected PV Systems," *31st IEEE Photovoltaic specialists conference and Exhibition, Jan. 2005.*

Bratcu A.I., Munteanu I., Bacha S., Picault D. and Raison B., "Cascaded DC–DC Converter Photovoltaic Systems: Power Optimization Issues," Industrial Electronics, IEEE Transactions on, vol.58, no.2, pp.403-411, Feb. 2011.

Busquets-Monge S., Rocabert J., Rodriguez P., Alepuz S. and Bordonau J., "Multilevel Diode-Clamped Converter for Photovoltaic Generators With Independent Voltage Control of Each Solar Array," *Industrial Electronics, IEEE Transactions on* , vol. 55, no.7, pp.2713-2723, July 2008.

Carannante G., Fraddanno C., Pagano M. and Piegari L., "Experimental Performance of MPPT Algorithm for Photovoltaic Sources Subject to Inhomogeneous Insolation," *Industrial Electronics, IEEE Transactions on,* vol. 56, no.11, pp.4374-4380, Nov. 2009.

Comparison of Storage Technologies for Distributed Resource Applications. (2003, Feb). [Online]. www.epri.com.

Dan Weinstock and Joseph Appelbaum, Optimal Solar Field Design of Stationary Collectors, J. Sol. Energy Eng. 126, 898 (2004).

Di Dio V., La Cascia D., Miceli R. and Rando C., "A mathematical model to determine the electrical energy production in photovoltaic fields under

mismatch effect," *Clean Electrical Power, 2009 International Conference on*, vol., no., pp.46-51, 9-11 June 2009

Dzung Nguyen and Lehman, B., "An Adaptive Solar Photovoltaic Array Using Model-Based Reconfiguration Algorithm," *Industrial Electronics, IEEE Transactions on, vol*. 55, no. 7, pp. 2644-2654, July 2008.

Feed in Tariff for Renewable Energy Projects in Ontario. (2013, Dec.). [Online]. Available: www.powerauthority.on.ca.

Femia, N.; Lisi, G.; Petrone, G.; Spagnuolo, G.; Vitelli, M.; , "Distributed Maximum Power Point Tracking of Photovoltaic Arrays: Novel Approach and System Analysis," *Industrial Electronics, IEEE Transactions on*, vol.55, no.7, pp.2610-2621, July 2008.

G. Velasco, J.J. Negroni, F. Guinjoan and R. Piqué. 'Energy Generation in PV Grid-Connected Systems: A Comparative Study Depending on the PV Generator Configuration'. *IEEE International Symposium on Industrial Electronics, 2005. (ISIE 05).* Vol. 3, páginas 1025-1030. Dubrovnik (Croatia), June 2005.

G. Velasco, J.J. Negroni, F. Guinjoan and R. Piqué. 'Grid-Connected PV Systems Energy Extraction Improvement by means of an Electric Array Reconfiguration (EAR) Strategy: Operating Principle and Experimental Results'. *IEEE 39th Power Electronics Specialists Conference,* 2008. (PESC 08). Rhodes (Greece), June 2008.

García, M., Vera, J.A., Marroyo, L., Lorenzo, E. and Pérez, M. (2009), Solar-tracking PV plants in Navarra: A 10 MW assessment. Progress in Photovoltaics: Research and Applications, April 2009.

H. Haberlin and M. Real, "Arc Detector for Remote Detection of Dangerous Arcs on the DC Side of PV Plants", presented at the 22nd European Photovoltaic Solar Energy Conference, Milano, Italy, Sept. 2007.

http://www.enbridge.com/media/

J. Bany and J. Appelbaum, The effect of shading on the design of a field of solar collectors, Solar Cells, Volume 20, Issue 3, April 1987, Pages 201-228, ISSN 0379-6787.

Kadri R., Gaubert, J.P. and Champenois G., "An Improved Maximum Power Point Tracking for Photovoltaic Grid-Connected Inverter Based on Voltage-Oriented Control," *Industrial Electronics, IEEE Transactions on* , vol.58, no.1, pp.66-75, Jan. 2011.

Kaushika N.D. and Gautam, N.K., "Energy yield simulations of interconnected solar PV arrays," *Energy Conversion, IEEE Transactions on* , vol.18, no.1, pp. 127- 134, Mar 2003.

Kenneth H. Rosen, John G. Michales, Jonathan L. Gross, Jerrold W. Grossman and Douglas R. Shier, “Hand book of Discrete and Combinatorial Mathematics”, 1st Edition, CRC Press, Florida, USA.

L. Ji, PV Fire: Experience and Studies, International Photovoltaic Reliability Workshop II, Tempe, AZ, July 31, 2009.

Lijun Gao, Dougal R.A., Shengyi Liu and Iotova A.P., "Parallel-Connected Solar PV System to Address Partial and Rapidly Fluctuating Shadow Conditions," *Industrial Electronics, IEEE Transactions on*, vol. 56, no.5, pp.1548-1556, May 2009.

M. Drif, P.J. Perez, J. Aguilera and J.D. Aguilar, "A new estimation method of irradiance on a partially shaded PV generator in grid-connected photovoltaic system," *Renewable Energy*, vol. 33, Iss. 9 pp. 2048-2056, Feb. 2008.

N.D. Kaushika and Anil K. Rai, An investigation of mismatch losses in solar photovoltaic cell networks, Energy, vol. 32, Iss. 5, May 2007, pp. 755-759.

Nalin K. Gautam and N.D. Kaushika, Reliability evaluation of solar photovoltaic arrays, Solar Energy, Vol. 72, Iss. 2, Feb. 2002, pp. 129-141.

Optimisation of Design of Grid-Connected PV Systems under Danish Conditions. (2009, April). [Online]. www.solenergi.dk.

Patel H. and Agarwal V., "MATLAB-Based Modeling to Study the Effects of Partial Shading on PV Array Characteristics," *Energy Conversion, IEEE Transactions on*, vol.23, no.1, pp.302-310, March 2008.

Patel H. and Agarwal V., "Maximum Power Point Tracking Scheme for PV Systems Operating under Partially Shaded Conditions," *Industrial Electronics, IEEE Transactions on*, vol.55, no.4, pp.1689-1698, April 2008.

Peng Lei, Yaoyu Li and Seem, J.E., "Sequential ESC-Based Global MPPT Control for Photovoltaic Array With Variable Shading," *Sustainable Energy, IEEE Transactions on* , vol.2, no.3, pp.348-358, July 2011.

Performance Ratio for the 15 Largest PV Systems in the IEA PVPS Database. (2007,Aug.). [Online]. Available: http://www.iea-pvps.org.

Picault D., Raison B., Bacha S., Aguilera, J.; De La Casa, J.; , "Changing photovoltaic array interconnections to reduce mismatch losses: a case study," *Environment and Electrical Engineering (EEEIC), 2010 9th International Conference on* , vol., no., pp.37-40, 16-19 May 2010.

Qiang Mei, Mingwei Shan, Liying Liu and Guerrero J.M., "A Novel Improved Variable Step-Size Incremental-Resistance MPPT Method for PV Systems," *Industrial Electronics, IEEE Transactions on*, vol.58, no.6, pp.2427-2434, June 2011.

Raed A. Sherif and Karim S. Boutros “Solar Module Array with Reconfigurable Tile,” Patent No.: US 6,350,944 B1, Feb. 26, 2002.

Roman E., Alonso R., Ibanez P., Elorduizapatarietxe S. and Goitia D., "Intelligent PV Module for Grid-Connected PV Systems," *Industrial Electronics, IEEE Transactions on* , vol.53, no.4, pp.1066-1073, June 2006.

Ryan Duwain Warren,” A feasibility study of stationary and dual axis tracking grid connected photovoltaic systems in the Upper Midwest” Ph.D thesis, Iowa State University, Iowa, 2008.

S. Silvestre, A. Boronat and A. Choudar "Study of bypass diodes configurtion on PV modules", *Applied Energy* , vol. 86, iss. 9, pp. 1632-1640, Sept. 2009.

Schimpf F. and Norum L.E., "Recognition of electric arcing in the DC-wiring of photovoltaic systems," *Telecommunications Energy Conference, 2009. INTELEC 2009. 31st International,* vol., no., pp.1-6, 18-22 Oct. 2009.

Spertino F. and Akilimali J.S., "Are Manufacturing I–V Mismatch and Reverse Currents Key Factors in Large Photovoltaic Arrays?," *Industrial Electronics, IEEE Transactions on,* vol.56, no.11, pp.4520-4531, Nov. 2009.

Strobl C. and Meckler, P. "Arc Faults in Photovoltaic Systems," *Electrical Contacts (HOLM), 2010 Proceedings of the 56th IEEE Holm Conference on,* vol., no., pp.1-7, 4-7 Oct. 2010

The German Energy Society, "Planning and installing photovoltiac systems: a guide for installers, architects, and engineers,",*2nd ed., London. Sterling, VA: Earth scan., 2008,* pp. 152-157.

Total photovoltaic power installed in IEA PVPS countries. http://www.iea-pvps.org (Online December 2013).

Ueda Y., Kurokawa K., Itou T., Kitamura K., Miyamoto Y., Yokota M. and Sugihara H., "Performance Ratio and Yield Analysis of Grid Connected Clustered PV Systems in Japan," *Photovoltaic Energy Conversion, Conference Record of the 2006 IEEE 4th World Conference on* , vol.2, no., pp.2296-2299, May 2006.

Velasco-Quesada, G., Guinjoan-Gispert, F., Pique-Lopez, R., Roman-Lumbreras, M. and Conesa-Roca, A., "Electrical PV Array Reconfiguration Strategy for Energy Extraction Improvement in Grid-Connected PV Systems," *Industrial Electronics, IEEE Transactions on,* vol. 56, no. 11, pp. 4319-4331, Nov. 2009.

Weinstock D. and Appelbaum, J., "Shadow variation on photovoltaic collectors in a solar field," Electrical and Electronics Engineers in Israel, 2004. *Proceedings. 2004 23rd IEEE Convention of* , vol., no., pp. 354- 357, 6-7 Sept. 2004.

Y. Auttawaitkul, B. Pungsiri, K. Chammongthai and M. Okuda. 'A Method of Appropriate Electric Array Reconfiguration Management for Photovoltaic Powered Car'. The 1998 IEEE Asia-Pacific Conference on Circuits and Systems (APCCAS 98). pp.: 201-204. Chiang (Thailand), November 1998.

Z.M. Salameh and C. Liang. 'Optimum Switching Point for Array Reconfiguration Controllers'. *IEEE 21st Photovoltaic Specialist Conference, 1990 (21st PVSEC).* Vol. 2, pp. 971-976. Kissimmee (USA). May 1990.

Z.M. Salameh and F. Dagher. 'The Effect of Electrical Array Reconfiguration on the Performance of a PV-Powered Volumetric Water Pump'. *IEEE Transactions on Energy Conversions.* Vol. 5, Iss. 2, pp. 653-658. December 1990.

APPENDIX A

Shell Power Max Solar Module (Ultra SQ85-P) Data

Number of series cells = 36

Nominal DC Power (P_{MPP}) = 85 W

Voltage at nominal power (V_{MPP}) = 17.2 V

Current at nominal power (I_{MPP}) = 4.95 A

Open circuit voltage (V_{OC}) = 22.2 V

Short circuit current (I_{SC}) = 5.45 A

Module efficiency (η) = 13.4 %

Temperature coefficient of P_{MPP} = -0.43 % /ºC

Temperature coefficient of V_{MPP} = -72.5 mV /ºC

Temperature coefficient of I_{MPP} = 1.4 mA /ºC

Temperature coefficient of V_{OC} = -64.5 mV /ºC

PUBLICATIONS FROM THESIS

- Paper presented and published on **"FACTS and HVDC technologies for the development of future power systems"** in CTAE, MPUAT during 8-9 March 2013.

- Paper presented and published on **"Analysis of photovoltaic array under partial shading conditions in national conference held in** Madhav Institute of Technology and Science held on 22 Feb 2014.

- Paper accepted in **International Journal of Scientific and Technology Research. Reference no :- IJSTR-0215-10891**