Design, development and performance evaluation of a mobile solar powered maize dehusker cum sheller

Shinde Ankita Vilas

Adm. No.-04FMP/17

DEPARTMENT OF FARM MACHINERY AND POWER
COLLEGE OF AGRICULTURAL ENGINEERING AND TECHNOLOGY
ODISHA UNIVERSITY OF AGRICULTURE AND TECHNOLOGY
BHUBANESWAR
2019

Shinde AV, M.Tech Thesis (2019) (Agril. Engg.)
Design, development and performance evaluation of a mobile solar powered maize dehusker cum sheller

Design, development and performance evaluation of a mobile solar powered maize dehusker cum sheller

A Thesis submitted to the Odisha University of Agriculture and Technology in Partial fulfillment of the Requirement for the degree of Master of Technology (Agricultural Engineering) in Farm Machinery and Power

By

Shinde Ankita Vilas

Adm. No.-04FMP/17

DEPARTMENT OF FARM MACHINERY AND POWER
COLLEGE OF AGRICULTURAL ENGINEERING AND TECHNOLOGY
ODISHA UNIVERSITY OF AGRICULTURE AND TECHNOLOGY
BHUBANESWAR

2019

ODISHA UNIVERSITY OF AGRICULTURE AND TECHNOLOGY
DEPARTMENT OF FARM MACHINERY AND POWER
COLLEGE OF AGRICULTURAL ENGINEERING AND TECHNOLOGY

Dr. Pradeepta Kumar Sahoo
Associate Professor
Department of Farm Machinery and Power
College of Agricultural Engineering and Technology
O.U.A.T., Bhubaneswar-751003, Odisha.

Bhubaneswar
Date:

CERTIFICATE I

This is to certify that the thesis entitled **"Design, development and performance evaluation of a mobile solar powered maize dehusker cum sheller"** submitted in partial fulfillment of the requirements for the award of the degree of Master of Technology (Agricultural Engineering) in Farm Machinery and Power to the Odisha University of Agriculture and Technology is a faithful record of bonafide and original research work carried out by **Shinde Ankita Vilas, Adm. No. 04FMP/17** under my guidance and supervision. No part of this thesis has been submitted for any other degree or diploma.

It is further certified that the assistance and help received by her from various sources during the course of investigation has been duly acknowledged.

CHAIRMAN
ADVISORY COMMITTEE

ODISHA UNIVERSITY OF AGRICULTURE AND TECHNOLOGY
DEPARTMENT OF FARM MACHINERY AND POWER
COLLEGE OF AGRICULTURAL ENGINEERING AND TECHNOLOGY

CERTIFICATE II

This is to certify that the thesis entitled **"Design, development and performance evaluation of a mobile solar powered maize dehusker cum sheller"** submitted by **Shinde Ankita Vilas, Adm. No. 04FMP/17** to the Odisha University of Agriculture and Technology, Bhubaneswar in partial fulfillment of the requirements for the degree of Master of Technology (Agricultural Engineering) in Farm Machinery and Power has been approved/disapproved by the students' advisory committee and the external examiner.

Advisory Committee

Chairman

(Dr. P.K. Sahoo)
Associate Professor, FMP, CAET

Members

1. (Dr. D. Behera)
Professor and Head, FMP, CAET

2. (Er. P.K. Barik)
Assistant Professor, MEE, CAET

External Examiner
(Name & designation)

ACKNOWLEDGEMENT

I am beholden to the highly benevolent and merciful almighty God whose grace bestows upon us. The satisfaction that accompanies the successful completion of any work would be incomplete without naming the people who made it possible, whose constant guidance and encouragement made this work perfect.

I avail this unique opportunity and feel immense pleasure and honor to express my deep sense of profound gratitude and indebtedness to my guide Dr. Pradeepta Kumar Sahoo, Associate Professor, Department of Farm Machinery and Power, CAET, Bhubaneswar for his valuable guidance, constant supervision, sound suggestion, timely advice, cordial and affectionate encouragement and above all meticulous correction of the manuscript.

I express my heartfelt gratitude to Dr. S. K. Dash, Dean, CAET, Odisha University of Agriculture & Technology, Bhubaneswar for his valuable advice, constant inspiration, relevant suggestion and allowing us to use laboratory facilities of the college for this research work.

I would also like to express my sincere thanks to Dr. Debaraj Behera, Professor and Head of Department of Farm Machinery and Power, CAET, OUAT, Bhubaneswar and member of my advisory committee for his valuable advice & encouragement and inspiration throughout my research work.

I wish to express my deep sense of gratitude to Er. P.K. Barik, Assistant Professor and member of my advisory committee for his untiring help, technical guidance and encouragement from all direction from the very beginning of the thesis work for successful completion of the thesis work.

I am also indebted to all the Professors of FMP Dept. for giving their valuable and constructive suggestions for timely completion of the thesis work.

The author also takes opportunity to express his sincere thanks to all faculty members of CAET for giving their helping hand for successful completion of the research work.

I am very much thankful to all the AICRP staffs for giving their helping hand, and fabrication of the implement and helping in field test.

I express my heartiest thanks to Mr. Prabhat Ranjan Sahoo and Mr. Santosh Sahoo without whom the fabrication would not made have possible.

I owe a lot to my beloved parents, who have taken a lot of pain for my studies, supported whole-heartedly and their blessings which enabled me to come to this stage. I am in dearth of words to express my heartfelt thanks to my family members, friends, classmates, seniors, juniors and all other well-wishers who have extended all possible moral support, love and direct and/or indirect help during the various stages of research work.

Place: Bhubaneswar

Date: **Shinde Ankita Vilas**

CONTENTS

CHAPTER NO.	TITLE	PAGE NO.
	CERTIFICATE	
	ACKNOWLEDGEMENT	
	CONTENTS	
	LIST OF FIGURES	
	LIST OF TABLES	
	LIST OF ABBREVIATIONS	
	ABSTRACT	
I	**INTRODUCTION**	**1-4**
II	**REVIEW OF LITERATURES**	**5-26**
	2.1 Engineering properties of maize	5
	2.2 Machine & operational parameters	9
	2.3 Design & development of machine	11
	2.4 Ergonomic design	14
	2.5 Performance evaluation of machine	18
	2.6 Solar photovoltaic system & its utilization	23
	2.7 Cost economics of operation	25
III	**MATERIALS AND METHODS**	**27-55**
	3.1 Physical properties of the maize	27
	3.1.1 Dimensions of the maize cob and grains	28
	3.1.2 Arithmetic and geometric mean diameter	28
	3.1.3 Sphericity	29
	3.1.4 Surface area	29
	3.1.5 Bulk density	29
	3.1.6 True density	29
	3.1.7 Porosity	30
	3.1.8 Moisture content of grains	30
	3.2 Design and development of mobile unit	31
	3.2.1 Details of mobile unit	31

3.2.2 Components of mobile unit 33
3.2.2.1 Solar panel 34
3.2.2.2 Solar charge controller 34
3.2.2.3 Battery setup 35
3.2.2.4 Cabin 35
3.2.2.5 Motor and motor controller 35
3.2.2.6 Steering and throttle 35
3.2.2.7 Differential and differential shaft 35
3.2.2.8 Chassis 36
3.2.2.9 Brakes 36
3.2.2.10 Wheels 36
3.2.2.11 Electric charger 36
3.2.3 Energy flow of mobile unit 37
3.2.4 Design of mobile unit 38
3.2.4.1 Load estimation 38
3.2.4.2 No. of solar panels required 38
3.2.4.3 Battery requirement 38
3.2.4.4 Sizing of solar charge controller 39
3.3 Design and development of solar powered maize dehusker cum sheller 39
3.3.1 Maximum permissible feed rate 39
3.3.2 Design for dehusking and shelling unit and mechanism 39
3.3.2.1 Dehusking elements 40
3.3.3 Top cover and feeding chute 41
3.3.4 Outlets 42
3.3.5 Main frame 43
3.3.6 Power transmission system 43
3.3.6.1 V belt design 44
3.3.6.2 Shaft design 46
3.3.7 Conceptual model of maize dehusker cum sheller 47
3.3.8 Development of maize dehusker cum sheller 48
3.2.9 Experimental procedure 48
3.4 Performance evaluation of mobile maize dehusker cum sheller 50

	3.4.1	Performance evaluation of mobile unit	50
	3.4.1.1	Irradiation meter	51
	3.4.2	Performance evaluation of maize dehusker cum sheller	51
	3.4.2.1	Total grain input per unit time	53
	3.4.2.2	Dehusking efficiency	53
	3.4.2.3	Shelling efficiency	53
	3.4.4.4	Total losses	54
	3.4.2.5	Output capacity	54
	3.5	Cost economics of mobile maize dehusker cum sheller	54
	3.5.1	Cost of operation	54
IV	**RESULTS AND DISCUSSION**		**56-77**
	4.1	Physical properties of maize	56
	4.2	Performance evaluation of mobile maize dehusker cum sheller	58
	4.2.1	Performance evaluation of mobile unit	58
	4.2.1.1	Measurement of solar radiations	59
	4.2.1.2	Recording of time for full charging of battery system	60
	4.2.2	Performance evaluation of maize dehusker cum sheller	60
	4.2.2.1	Dehusking efficiency	60
	4.2.2.2	Shelling efficiency	65
	4.2.2.3	Total losses	69
	4.2.2.4	Output capacity	73
	4.3	Cost economics of mobile maize dehusker cum sheller	77
V	**SUMMARY AND CONCLUSION**		**78-79**
VI	**SUGGESTIONS FOR FUTURE WORK**		**80**
	REFERENCES		**i-viii**
	APPENDICES		**I-XII**

LIST OF FIGURES

FIGURE NO.	PARTICULARS	PAGE NO.
3.1	Measurement of true density	30
3.2	Measurement of bulk density	30
3.3	OMSPAM (OUAT Multipurpose Solar Powered Agri Machinery)	31
3.4	Isometric view of OMSPAM (Mobile unit)	32
3.5	Energy flow of OMSPAM (Mobile unit)	37
3.6	Isometric view of dehusking unit	40
3.7	Isometric and top view of nitrile rubber	41
3.8	Isometric and rear view of top cover	42
3.9	Isometric view of outlets with top cover	42
3.10	Isometric view of frame	43
3.11	Isometric view of the conceptual model of thresher	47
3.12	Isometric view of developed maize dehusker cum sheller	48
3.13	Energy flow of maize dehusker cum sheller	49
3.14	Top cover with dehusking and shelling arrangement	50
3.15	Mobile unit with maize dehusker cum sheller	50
3.16	Solar irradiance meter	51
3.17	Measurement of solar radiations	51
3.18	Performance evaluation of mobile solar powered maize dehusker cum sheller	52

3.19	Components of OMSPAM (mobile unit)	55
4.1	Effect of rotational speed & moisture content on dehusking efficiency at feed rate of 20 kg/h	63
4.2	Effect of rotational speed & moisture content on dehusking efficiency at feed rate of 40 kg/h	64
4.3	Effect of rotational speed & moisture content on dehusking efficiency at feed rate of 60 kg/h	64
4.4	Effect of rotational speed & moisture content on shelling efficiency at feed rate of 20 kg/h	67
4.5	Effect of rotational speed & moisture content on shelling efficiency at feed rate of 40 kg/h	68
4.6	Effect of rotational speed & moisture content on shelling efficiency at feed rate of 60 kg/h	68
4.7	Effect of rotational speed & moisture content on total losses at feed rate of 20 kg/h	72
4.8	Effect of rotational speed & moisture content on total losses at feed rate of 40 kg/h	72
4.9	Effect of rotational speed & moisture content on total losses at feed rate of 60 kg/h	73
4.10	Effect of rotational speed & moisture content on output capacity at feed rate of 20 kg/h	76
4.11	Effect of rotational speed & moisture content on output capacity at feed rate of 40 kg/h	76
4.12	Effect of rotational speed & moisture content on output capacity at feed rate of 60 kg/h	77

LIST OF TABLES

TABLE NO.	PARTICULARS	PAGE NO.
3.1	Detailed technical specification of OMSPAM	33
3.2	Technical specification of solar panel	34
3.3	Specification of wheel	36
3.4	Technical specification of electric charger	37
4.1	Physical properties of maize variety selected for the study	58
4.2	Measurement of solar radiation	59
4.3	Range and marginal mean of dehusking efficiency at different levels of variables	61
4.4	ANOVA for dehusking efficiency	63
4.5	Range and marginal mean of shelling efficiency at different levels of variables	65
4.6	ANOVA for shelling efficiency	67
4.7	Range and marginal mean of total losses at different levels of variables	69
4.8	ANOVA for total losses	71
4.9	Range and marginal mean of output capacity at different levels of variables	73
4.10	ANOVA for output capacity	75
4.11	Cost economics of mobile maize dehusker cum sheller	77

LIST OF ABBREVIATIONS

ANOVA	:	Analysis of variance
CAET	:	College of Agricultural Engineering & Technology
CV	:	Coefficient of variance
cm	:	Centimeter
db	:	Dry basis
^{0}C	:	Degree Celsius
DF	:	Degrees of freedom
Dia.	:	Diameter
Eqn	:	Equation
F	:	Feed rate
Fig.	:	Figure
G	:	Gram
h	:	Hour
ha	:	Hectare
hp	:	Horse power
kcal	:	Kilocalorie
kg	:	Kilo gram
kW	:	Kilowatt
m	:	Meter
M	:	Moisture content
mm	:	Millimeter
M.S	:	Mild Steel
mt	:	Metric ton
No.	:	Number
OMSPAM	:	OUAT Multipurpose Agri Machinery
OUAT	:	Odisha University of Agriculture & Technology
q	:	Quintal
rpm	:	Revolution per minute
Rs	:	Rupees
S	:	Speed
SD	:	Standard deviation

ABSTRACT

Maize *(Zea mays)* is grown throughout the year in India. Maize is one of the most widely cultivated crop grows in both tropical and warm temperate latitudes. Maize in India ranks third in total production and productivity and fifth in total area. Since last one decade, maize cultivation area is continuously increasing to meet the raising demand in the world. Solar power is ideally used in India due to location factor and also gives the benefit to the environment as renewable energy. Solar power operated mobile maize dehusker cum sheller gives a significance in many rural locations of most developing countries where grid connected electricity is either unavailable or unreliable so using energy from source is beneficial. It also gives a significance in a saving of cost on fuel, electrical energy and also it is a more useful in areas where availability electricity is a major problem.

The present research was undertaken with the objectives of design & development of mobile maize dehusker cum sheller & study of performance evaluation of develop machine with cost estimation. Also a present study has been conducted to investigate the physical properties of variety (OMH 14-27) grown in Odisha for the designing of various components of machine. The basic considerations for development of a mobile maize dehusker cum sheller were taken into account and the conceptual model of the mobile maize dehusker cum sheller was developed using CATIA V5 software. The principle of dehusking and shelling actions were shearing & tearing by rubber type dehusking elements and friction by taper section with cuts on both side of section given for shelling purpose in a top cover of machine.

In present study, the small sized DC motor (0.5 hp) operated mobile maize dehusker cum sheller was developed for selected operational parameters, viz. moisture content (11.23, 13.07, 15.36 %), feed rate (20, 40, 60 kg/h) and rotational speed (415,460,510 rpm). The machine performance parameters resulted that, the maximum dehusking (98.79 %) and shelling (96.84 %) was found to be at 20 kg/h feed rate, 510 rpm and 11.23 % moisture content. The total losses of grains were found to be maximum (7.08 %) while it was minimum (4.31%) on 11.23 % of moisture content, 510 rpm of rotational speed & 40 kg/h of feed rate. The maximum output capacity (36.14 kg/h) was obtained for 60 kg/h feed rate.

The mobile unit (OMSPAM) performance revels that generally OMSPAM takes 7 to 8 hours for full charging of battery & the full charge battery holds for 5-6 hours in working condition. The vehicle travels at a speed of 35km/h (25 km/h fully laden) & range of distance travelled is 120-130 km with solar panel (on sunny day). The total production cost of the mobile maize dehusker cum sheller was found to be Rs. 1, 78,000 and the operating cost per hour as 169.22 Rs/h.

Keyword's: Renewable energy, Mobile unit, Maize, Dehusking, Shelling

CHAPTER I

INTRODUCTION

Maize (*Zea mays* L.) also called as corn is one of the most important cereal crop in the world agricultural economy. Several thousand years back it is originated from Mexico, even before Columbus landed in South America. The ideal soil required for growing of maize is well-drained, commonly a sandy loam soil. Maize crop requires day temperatures of 18° C to 27° C and around 14° during night temperatures and soils with pH of 5.8 to 6.8 for optimal growth along with good sunshine and it thrives best in the areas where annual rainfall between 60 cm to 110 cm**.** Maize is called as "Queen of cereals" and "King of fodder" due to it's highly importance in human and animal food. It is used as the raw material and base for the food and beverage manufacturing industrial products like starch, syrup, alcohol, acids, food, feed and ethanol. Also it is a highly rich source of starch (60-80%), protein (8-12%), fat (3-5%) and minerals (1-2%) supplying an energy density of 365 kcal/100 g and grown throughout the world. Propagation in maize farming is done mainly by seeds. The sowing methods like broadcasting, line sowing, drilling or dibbling and transplanting the seedlings are used in crop of maize. Seed rate in maize farming is about 20 to 25 kg per hectare.

As last one decade, area under maize cultivation is continuously increasing to meet the raising demand in the world. United States has share of 36% of the total world production followed by China (21%), and Brazil (9%) account to 66% of the total global production. India produces about 2% the world's maize produce. In India, maize mostly grown in all the season and it is one of the most important staple food. Among the cereal crops, maize ranks third in production (24.17mt) and fifth in area (9.06 m-ha) during 2013-14. The rise in area was obsessed by enlarged usage of maize in different sectors like starch, confectionaries, *etc.*, for consumption 28%, industrial 12% apart from poultry feed 48%. Hence, the country's production of maize lags far behind 24.7 q / ha against world's average production 51.4 q / ha. In India maize is grown in all the seasons, of which nearly 90% during kharif season, 7-8% during rabi season and 1-2% during summer season. Karnataka is the leading producer of maize in India producing around 16% of India's total maize production.

Agricultural field mechanization is viewed as assessment of technologies to ensure timely field operations for increasing of productivity, reduce in losses in crops and improvement in the quality of agro product. Also the cost effectively, it increases the land and other input productivity using labour saving and reducing old and drudgery devices. The restrictions in promotion of mechanization include the variable requirement of equipment and tools for each and every agricultural climatic zone of India, the small and apart land holding, minimum investment of the farmers, terrible irrigation techniques, poor status of the farmers and maintenance facilities of the crops field and crops, *etc.* In India, tillage of fields, sowing or planting and weeding techniques for maize cultivation has been mechanized by 80-90% whereas, level of mechanization in harvesting and threshing is below 20% Singh (2010). The farm operations like harvesting, threshing and also a post-harvest operations needed mechanization and demand the use of suitable and proper equipment to obtain higher operational efficiencies and productivity.

Dehusking and shelling are the most important crop processing operations which are used to prepare quality of seeds for the market. Dehusking of maize involves removal of the husk from the ear head without causing the damage to grains and shelling involves the separation of maize grain from the cob.

After harvesting, cobs are removed by manually with traditional sickle or by or mechanization and cobs were dried in open space for the reduction of moisture content up to 15% to 21% (db). Traditionally, dehusking and shelling of maize are carried out by manually which involves a lots of drudgery and also it is time consuming. The grains were separate from dried dehusked cobs by manual or mechanical devices; this separation process is called shelling. When its output compared with the manual process, it reported to be 30 kg/h with shelling efficiency of 80% and grain damage of 8.3% (Mudgal *et al.*, 1998). Also reported that the percent of recovery of grain from maize cob in manual shelling is 78.4% (Anon., 2005). Thus, manual shelling operation is highly labour intensive, time consuming and more drudgery in addition to losses of grain in terms of quantity and quality. Also a hand operated maize dehusker sheller is suitable for farm women, it still makes women's feel difficult to operate and yields very small level of efficiency and dehusking as a separate activity leads shelling that brings additional burden on

women. The available equipment are suitable for certain group of farmers i.e. medium and large farmers while in India, about 80.3% of farmers of marginal and small group operate 36% of the area Singh *et al.* (2011).

Mechanization of threshing is obtaining more importance in recent days. Due to increased importance of mechanized threshing, various types of threshers have been introduced and evaluated throughout the country. Amongst them the commonly used ones on the Indian farm are spike tooth type, beater type, syndicator type and chaff cutter type meant for threshing specific crops. The prevailing shelling and dehusking methods such as the maize cobs are rubbed on one another, also rubbed on bricks, stone and wire mesh by using iron cylinder are time consuming involves drudgery and exposure of crop over a time to natural hazards like rain, fire, animals, birds and insects leads to losses in quantity and quality of grains. Hence mechanization of these activities could well be the helpful to overcome these problems. As significance of this realization, several types of manually operated, pedal operated, high capacity engine operated, motor operated and tractor operated maize dehusker cum shellers have been introduced and commercialized throughout the country but there is no availability of solar powered mobile maize dehusker cum sheller. The capacity of manually operated equipment varied in between 27 to 150 kg/h which is suitable for marginal and small farmers, whereas 1000 to 1800 kg/h for engine operated and more than 2000 kg/h for tractor operated equipment are suitable for large farmers. So there is a need of developing a solar powered mobile maize dehusker cum sheller for marginal and small for the capacity in between 30 to 100 kg/h with higher level of dehusking and shelling efficiency.

India has very good conditions for the development of photovoltaic solar power system due to the high mean daily radiation and high number of sunny days in most parts of the country. For this reason administration and companies working in the sector are developing policies and investing in photovoltaic solar power systems. Solar energy is clean, quiet and visually unobtrusive. Keeping in view the impending shortfalls in conventional power generating sources and growing demand of energy, it is important to go for non-conventional sources. Solar power is ideally used in India due to location factor and also gives the benefit to the environment as renewable energy. Solar power operated maize dehusker cum sheller gives a significance in

many rural locations of most developing countries were grid connected electricity is either unavailable or unreliable or too expensive so using of solar power is beneficial. The mobile maize dehusker cum sheller was designed and built to improve the standards of living of people living in villages of developing countries and also it reduces the drudgery of human. There are several motor or engine and tractor operated maize dehusker shelling machines for dehusking and shelling purpose. Solar power operated mobile maize dehusker cum sheller gives an also significance in a saving of fuel cost, electrical energy and also it is a more useful in an area where electricity as a major problem.

Keeping the above factors in view, present study was under taken to survey the different threshing/shelling methods used for maize by farmers and different power operated maize dehusker cum shellers were evaluated for suitability in terms of social economic conditions that are prevailing. In this context present research study on "Design, development and performance evaluation of a mobile solar powered maize dehusker cum sheller" was undertaken with the following objectives:

1. To design and develop a mobile solar powered maize dehusker cum sheller.
2. To evaluate the performance of developed maize dehusker cum sheller.
3. To study the cost economics of developed machine.

CHAPTER II

REVIEW OF LITERATURES

In this chapter, for the design and development of a mobile solar powered maize dehusker cum sheller different review of literatures were collected on the following points.

1) Engineering properties of maize
2) Machine & operational parameters
3) Design & development of machine
4) Ergonomic design of machine
5) Performance evaluation of machine
6) Solar photovoltaic system & its utilization
7) Cost economics of operation

2.1 Engineering properties of maize

Anazodo *et al.* (1980) studied the maize physical and mechanical properties which are related to the combine cylinder performance. For three maize varieties over three harvest dates they measured the maize kernel damage, breakup, efficiency, shelling efficiency and concave separation in stationary rasp bar cylinder and results were discovered that important effect of the maize varieties and harvest dates on physical and mechanical properties. .

Jayan and Kumar (2004) studied physical properties of maize, red gram and cotton seeds which are length, breadth, surface area, roundness, equivalent diameter, sphericity, seed weight, and true density, angle of repose and coefficient of restitution and they designed the thickness and cell diameters of the seed metering discs in reference to the maximum breadth and length of seeds. Also roundness and sphericity affect seed flow through the various components of the planter. Roundness of maize, red gram and cotton were 1.14 ± 0.14, 1.15 ± 0.10 and 1.26 ± 0.10, respectively, while sphericity of these seeds in the natural rest position were 0.621 ± 0.065, 0.75 ± 0.016 and 0.550 ± 0.016, respectively. To ensure free flow of seeds, the slope of the seed hopper was, therefore, fixed at 30°, which is modestly higher than the average angle of repose of seeds.

Seifi M. R and Alimardani R. (2010) were determined the effect of moisture content on some physical properties and also on mechanical behavior of corn grains under compression load of two corn varieties are Sc704 and Dc370. They used the four levels of moisture content which is ranging from 4.73-22% wet base (w.b.) for Sc704 variety and 5.15-22% w.b. for Dc 370variety. As the increasing of moisture content thousand grain weight, true density and porosity increased from 271.0 to 321.4 g & 267.7 to 305.8g, 1250 to 1325 kg/m^3 & 997 to 1170 kg/m^3 and 43.2% to 51.02% & 31.90% to 45.98% but bulk density decreased from 710 to 649 kg/m^3 & 679 to 632 kg/m^3 for Sc704 and Dc370, respectively. Also as increasing of moisture content the static coefficients of friction on various surfaces, namely, galvanized iron, plywood and plastic also increased linearly. The mechanical properties of corn like average rupture force and rupture energy calculated for both the varieties and they found that Dc370 had higher rupture force than Sc704 in all moisture content levels and the variance of rupture energy data for Sc704 was greater than those of Dc370.

Tarighi *et al.* (2011) were studied the Physical and mechanical properties of maize seeds grain importance during design, improvement and optimization of separation and cleaning at a moisture content in the range of 5.15 to 22% (d. b.).The average length, width, thickness and arithmetic diameter were increased by 6, 2.2, 1.66 and 3.3%, with increasing moisture content, respectively. In the moisture range from 5.15 to 22% (d. b.), the results showed that, the porosity varies from 31.41 to 45.98%, the static angle of repose varies from 42 to 57º, the thousand seed mass increased from 267.7 to 305.8 g and the coefficient of friction on compressed plastic, plywood and galvanized iron sheet surfaces were increased from 0.36 to 0.67, 0.36 to 0.6 and 0.38 to 0.57, respectively. The bulk density decreased from 679.1 to 632 kg/m^3 and true density increased from 999.33 to 1170.49 kg/m^3.

Sobukola *et al.* (2013) reported a physical properties of high quality maize (Swam 1 variety) seeds (Zea mays) as affected by moisture levels. A study was conducted to evaluate the physical properties that affect equipment design, processing, storage and transportation of high quality protein maize (SWAM 1) seeds of moisture content varying from 9.38 to 32.7% (d.b). The physical properties like linear dimension of grain (length, width, thickness) and the geometric diameter, sphericity index, seed volume, seed surface area and thousand seed mass increased

linearly from 9.80 to 10.55 (length), 8.60 to 9.06(width), 4.00 to 4.75(thickness) and 6.85 to 7.69 mm, 69.89 to 72.85, 99.36 to 138.56 mm, 124.55 to 157.76 mm^2 and 240.36 to 303.71 g, respectively. Other physical properties like bulk density, true density and porosity which are decreased linearly from 1.109 to 1.057 g/m^3 1.365 to 1.176 g/m^3 and 18.75 to 10.12%, respectively. Static coefficient of friction was found to increase on plywood, galvanized iron, aluminum and stainless steel surfaces and it increased logarithmically from 0.55 to 0.91; 0.52 to 0.81, 0.49 to 0.70, and 0.46 to 0.68, respectively. Angle of repose increased linearly on plywood, galvanized iron, aluminum and stainless steel surfaces from 18.91 to 29.05, 17.00 to 26.96, 15.93 to 23.98 and 15.55 to 22.19°, respectively.

Sangamithra *et al.* (2016) were investigated the moisture dependent physical properties of maize kernels and they measure the geometric, gravimetric and frictional properties at different levels of moisture content from 8.7 to 21.7% d.b. The results obtained showed that the changes in moisture content of maize kernel lead to minimum variation in geometric properties. The principle dimensions such as length, width, thickness, geometric mean diameter and surface area increased in a linear manner while volume, 1000 kernel weight and sphericity of maize kernels increased in a non-linear manner as an increase in moisture content. An increase in bulk density and true density was observed whereas the porosity decreased nonlinearly in the fixed range of moisture content at 8.7, 13, 17.4 and 21.7% d.b. The highest coefficients of friction were found on the concrete surface followed by wooden slab and aluminum sheet.

Chilur & Sushilendra (2016) investigated on engineering properties such as physical, aerodynamic, frictional properties of maize. The Physical properties viz., roundness, linear dimensions (such as length, width, thickness), arithmetic mean diameter, geometric mean diameter, sphericity, surface area, bulk density, true density, test weight of grains [W1000] and grain to straw ratio were observed as 0.28,10.99 mm (length), 8.18 mm (width), 5.15 mm (thickness), 8.15 mm, 7.69 mm, 0.69, 209.17 mm^2, 0.74 g/cc, 1.03 g/cc, 276.58 g and 3.30, respectively. The aerodynamic property, i.e. terminal velocity of grain varied from 14.56 to 15.6 m/s with 0.43 m/s SD, whereas the mean terminal velocity of husk was 1.2 m/s. The frictional properties such as angle of repose was found 22.76˚ and coefficient of

friction was 0.31 [grain-grain], 0.35 [grain-fly wood], 0.44 [grain-MS sheet] and 0.50 [grain to wood]. The engineering properties consist of physical, aerodynamic, & frictional properties. The mean length, diameter and weight of un-dehusked cob were 179.36 mm, 53.88 mm and 212.76 g, respectively, with a Standard Deviation [SD] of 29.56 mm, 4.37 mm and 13.56 mm, respectively. Measurement of dimensions of materials plays a key role in deciding the volumetric capacity of hopper, clearances in concave, concave & sieve opening size, also a frictional property for deciding the tilt of sides in the hopper and sieve inclination.

Kumar *et al.* (2017) studied the effect of moisture content on physical properties of maize grains. The physical properties of the maize samples were determined at the desired moisture content levels of 12, 14, 16, 18 and 20 (% w.b.) and they concluded that average three axial dimensions, sphericity, surface area, volume, thousand grain weight, true density, porosity and the static coefficient of friction were found to be increased and the bulk density was found to be decreased with increase in moisture content from 12 to 20 (% w.b.); all at an average temperature of 30°C.

Karthik *et al.* (2017) were measured the physical and engineering properties of corn cob and corn kernel for designing of processing equipment. The physical properties viz., unit mass of the cob with and without husk varies from 246.92 ± 37.49 g to 371.53 ± 68.16 g, linear dimension varies from 44.40 ± 253 to 289.90 mm, geometric mean diameter is in the range of 82.80 ± 4.92 mm to 86.60 ± 5.50 mm, arithmetic mean diameter is in the range of 123.70 ± 11.47 mm to 126.20± 13.4 mm, cross sectional area of the corn cobs varies from 644.50 ± 675.20 mm^2 to 3803.4 ± 803.71mm^2 and shape index is in range of 5.61 ± 0.88 mm to 6.546 ± 0.96 mm also the average husk percentage content on the corn cob was in the range of 19% to 32% and thousand kernel weight of the selected corn cob verities varies from 80.50 ± 1.51 g to 321.85 ± 17.18 g, respectively.

Brar *et al.* (2017) were studied the physical properties of maize seeds which plays an important role for designing seed metering device. Three varieties of maize seed PMH-1, PMH-10 and PIONEER-3396 were evaluated for their engineering properties in the laboratory. Therefore, the physical properties of the maize seeds such as size, shape, hundred grain weight, angle of repose, bulk density and coefficient of

static friction are important from engineering point of view and were studied for the development of metering mechanism of maize planter. Fifty seeds of each variety (PMH-1, PMH-10 and PIONEER-3396) were tested and observed for shape and size of the seeds. During observations their geometric mean diameter comes out to be 7.33 mm, 7.06 mm and 7.68 mm for PMH-1, PMH-10 and PIONEER-3396, respectively. The average value of angle of repose during study was observed to be 28.59°, 27.10° and 28.66° for PMH-1, PMH-10 and PIONEER-3396, respectively. The roundness observed in the laboratory was 0.74, 0.74 and 0.66 and their sphericity was 0.78, 0.79 and 0.75 for PMH-1, PMH-10 and PIONEER-3396, respectively. Bulk density for the three varieties of maize was 733.88 kg/m^3, 750.01 kg/m^3, 741.27 kg/m^3 and the value of Coefficient of static friction was 0.64, 0.58 and 0.55 for PMH-1, PMH-10 and PIONEER3396, respectively.

Chhabra Nisha and Kaur Amarjeet (2017) evaluated the physical and engineering characteristics of food material are crucial for efficient equipment design. In the present study the above characteristics were accessed for maize, pearl millet and soybean at moisture content 6.40%, 7.95% and 5.25% in the order. Data revealed that highest length, breadth and thickness (L.B.T) and geometric mean diameter (GMD) was found in maize. Test weight and thousand kernel weight ranged between 718.33 g to 791.33 g and 10.72 g to 330.21 g in the sequence, being highest for maize in both cases. The average bulk density and true density were 0.72 to 0.79 g/cc, 1.04 to 1.24 g/cc, respectively. Soybean exhibited maximum porosity trailed by maize and pearl millet. Among the grains, pearl millet had highest internal friction while maize and soybean portray the highest external friction. Referring to angle of repose, soybean showed highest value followed by maize and pearl millet.

2.2 Machine and operational parameters

Major machine and operational parameters are the clearance between the cylinder spikes & the concave, speed of cylinder & the rate of feeding maize cobs into the machine.

Waelti &. Buchele (1969) studied the factors affecting corn kernel damage in combine cylinders. Found that as the kernel-moisture content decreased, the kernel size decreased, indicating kernel shrinkage as they dried, Kernel strength and stress

increased as kernel moisture decreased. Kernel detachment force was independent of kernel moisture or other kernel properties. As the kernel moisture decreased, kernel damage decreased. No differences in kernel damage were obtained for field shelling and lab shelling of ears. Planting date did not affect kernel damage. Low kernel damage was associated with low detachment force, high kernel strength, low kernel deformation, low cob strength.

Ademosun & Adesuyl (1995) Concluded the three major machine & operational parameters for the mechanized dehusking & shelling of maize are the clearance between the cylinder spikes & the concave , speed of cylinder & the rate of feeding maize cobs into the machine. The optimum clearance between the cylinder peg & concave is found to be between 1.8 cm and 2.4 cm at feeding rate of 1 or 2 maize cobs per minute and between 2.2 cm and 2.6 cm at feeding rate of 3 to 6 maize cobs per minute. It was also found that the optimum speed of the cylinder is between 600 rpm and 700 rpm, irrespective of the feeding rate. Found that a dehusking, shelling, grain cleaning efficiency about 99.5%, 98%, 99.2% respectively. The capacity of the machine varies from 10kg to 40 kg of maize cobs per hour, depending on the feeding rate.

E. Askari Asli-Ardeh and Y. Abbaspour-Gilandeh (2008) studied the investigation of the effective factors on threshing loss, damaged grains percent and material other than grain to grain ratio on an auto head feed threshing unit. The effects of crop moisture content condition, variety and drum speed were significant on threshing loss. In general, mean of threshing loss at dry condition of crop was higher than wet condition of crop. Optimum speed of drum was 650 rpm because threshing loss and damaged grains percent were equal to zero at this level of drum speed. Damaged grains percent at wet moisture content condition of crop was lower than at dry moisture content condition of crop. The main effects of crop moisture content conditions (at probability level of 5%), variety and drum speed and their interactions (at probability level of 5%), drum speed and interactions (at probability level 1%) were significant on the MOG/Ratio. In general, MOG to grain ratio at tests with dry crop was higher than wet crop. Increasing of drum speed increased the MOG to grain ratio significantly.

Chilur *et al.* (2014) studied an effect of operational parameters on dehusking cum shelling efficiency and broken grain percentage of maize dehusker-cum-sheller. The shelling efficiency increased significantly from peripheral speed of 6.2 to 6.6 m/s, thereafter it increased gradually and remains nearly constant up to 7.6 m/s peripheral speed. The maximum percentage of broken grains were obtained at 20 mm concave clearances for all the cylinder peripheral speeds while minimum for 35 mm concave clearance.

Srison *et al.* (2016) studied effect of operating factors for an axial –flow maize shelling unit on losses and power consumption. The main conclusions for the study were: the rotor speed (RS) significantly affected shelling unit loss (TL), reducing TL as increasing of RS; the moisture content (MC) and rotor speed (RS) significantly affected on the grain breakage, with increased MC and RS resulting in an increased tendency for grain breakage; the moisture content (MC), feed rate (FR) and rotor speed (RS) significantly impacted power consumption (P), with increased MC, FR and RS increasing consumption.

2.3 Design and development of machine

Sakun (1963) used wire loop cylinder for threshing of maize's and found that the better threshing performance with using of wire loop cylinder in place of rasp –bar cylinder

Hamid et al. (1980) developed a low damage maize shelling machine based on the principle of axial flow to reduce the shelling force and to increase the shelling efficiency. The sheller consisted of three inclined rollers rotating at different speeds at an angle of 20° with the vertical but in the same direction and the ears were fed axially through a gap of 33 mm between the rollers. The test was carried out at a speed of 1200 rpm, 1100 rpm, 1000 rpm 900 rpm and at the moisture contents of 16%, 18%, 20%, 22% respectively. At 1200 rpm and moisture content below the 20%, the shelling capacity and shelling efficiency found to be 330 kg/ ha. and 97.4%, respectively. It was found that the breakage was high in combine and low in hand shelling as compared to the roller sheller.

Harrington (1980) designed a multi-crop thresher by using of a spike tooth cylinder and inverted bar type closed concave. He had reported that for to breaking

bunches better spike tooth concave helped and provided more complete threshing and separation whereas non meshing spike tooth concave was only practical in the inverted position where gravity provided continuous self-cleaning.

Joshi (1981) gave the information about selection and design of threshing parameters and components. From the study he suggested an improved design of chute for safe feeding of the crop in the thresher. Based on the research, papers, technical literature, different test reports and existing thresher's information have been collected for maize crop was the recommended cylinder peripheral speed was 750 to 1220 m/min with concave clearance varies from 22 to 30 mm.

Anon. (1986) reported that at TNAU, Coimbatore the power operated maize dehusker-sheller was developed and it removes the outer sheath and shellers the maize cobs simultaneously i.e. dehusking & shelling is done at the same time. The machine has lugs on dehusker-sheller cylinder of square solid blocks types and has helically louvers at start and end of cylinder.

Danfulani (2009) carried out an analysis on design of a maize shelling machine which consist of a threshing tooth on the surface of a rotating shaft which provides the required shelling forces. The capacity of maize shelling machine is 5000 kg of maize per day and it is run by 5 hp diesel engine which could be easily operated by rural peoples. The design was done with minimum cost of readily available materials without affecting the quality of its output.

Hassan *et al.* (2009) designed and constructed the very low and affordable cost maize sheller from locally available materials. This machine was constructed for shelling of maize cob i.e. it separates the grains from the cob with its threshing efficiency was 99.2% and breakage losses were insignificant and the capacity of threshing of maize is 200 kg/h. The machine is less bulky, simple and effective with its self-cleaning ability.

Tastra (2009) reported about the development of a new power sheller was operated by 6.5 to 8.5 hp diesel engine that could reduce grain damage and broken corn cobs. The developed sheller has highest shelling of capacity 4.82 t/h which significantly higher than the local maize sheller which is operated by 6.5 hp diesel

engine. The basic principle of this new developed machine was during the shelling process the reduction of the normal stress by developing a concave system that could vibrate without causing great impact on the maize grain. For this purpose using a rubber spring the concave system was suspended to minimize impact.

Abba and Atiku (2010) studied the effect of moisture content on maize shelling speed using a manually operated hand sheller of cone type. For study they used the twenty unthreshed maize cob samples (A-J). The result indicated that sample A which had the highest moisture content (28.99% w. b.) after 24 h drying time and lowest shelling speed of 0.96 rpm as compared to sample J, after sixty nine hours of (69th) oven drying recorded the lowest moisture content (15.10% w. b.) and the fastest shelling speed of 0.75 rpm. It was observed that sample J had the smallest grains weight (84.2 g) with the shortest shelling duration, while sample A recorded larger grain weight (162.9 g) due to differing moisture content of the maize grains. It was resulted that maize cobs be dried properly to for easier and faster shelling operation with less fatigue and minimum grain damage. As lower the moisture content is varies inversely proportional to the shelling speed.

Singh *et al.* (2011) reviewed the status of maize threshing in India and they reported that the output in terms of dehusking and shelling maize cob was 30 kg/h with 8.3% grain damage in traditional system i.e. dehusking by hand and shelling by beating wooden sticks. They recommended the power operated maize dehusker sheller may be suitable for strong group of medium and large farmers. In this context, they stated that about 80.3% of farmers of marginal and small group operates 36% of the area in India. The hand operated maize dehusker cum sheller was suitable for farm women workers. They concluded that power operated maize dehusker-sheller or threshers have been developed & are being commercialized but hand operated maize dehusker-shellers are not available as they are required for hill, marginal and small farmers.

Singh *et al.* (2012) designed the hand operated axial flow maize dehusker-sheller operated by farm women. From grain breakage point of view the peripheral cylinder tip speed of 5.6 to 5.7 m/s was found optimum. The output capacity with machine was 60 kg/h at feed rate of 80 kg un-dehusked cob/h .The dehusking efficiency was 100%. Shelling efficiency 98.85% and grain breakage 0.3% at 5.6 m/s cylinder speed.

Patil *et al.* (2016) studied the design and fabrication of corn shelling and threshing machine. The machine basically compromises of separate shelling chamber, threshing chamber, collecting tray and motor of 2 hp. The arrangement of these parts is connected by belt and pulley mechanism. The weight of machine was only 95 kg. After testing the machine, they found that the production rate for threshing operation was 300 kg/hr. and for shelling operation was 300 kg/hr. At last they conducted a germination test for corn seeds which are threshed by the developed machine and resulted that the time required to grow from seed was about 48 hours.

Kumar *et al.* (2018) studied the impact assessment of a PAU maize dehusker cum sheller and observed that threshing capacity of the machine was between 400-510 kg/h at different M.C. of cob i.e. 14-20% (db.), where the dehusking efficiency at 16% M.C. & 740 RPM was maximum 85%. The grain breakage & unthreshed grain percentage was minimum at cylinder speed of 740 RPM.

Chilur & Kumar (2018) designed & developed a maize dehusker cum sheller (MDS) which is operated by 2.23 kW electric motor having capacity of 600 kg/h. The developed trapezium shaped MDS machine having overall dimensions of 1200× (500 & 610) × 810 mm (length × (top & bottom) ×height). For machine performance & seed quality parameters the selected operational parameters viz. cylinder peripheral speed (7.1 m/s), concave clearance (25 mm), & feed rate (600 kg/h) were studied. The performance of machine under these parameters were reported that the dehusking efficiency of 99.56%, shelling efficiency of 98.01%, cleaning efficiency of 99.11%, total loss of 3.63%, machine capacity of 527.11 kg/kW-h & germination percentage of 98.93%. These recommended that overall machine performance was satisfactory for maize dehusking cum shelling operation and for producing of maize grains for seeding purpose.

2.4 Ergonomic design of machine

Gite and Singh (1997) found that, more practical if the equipment was developed for women workers as in most of the cases the equipment like dehusker-sheller were suitable for women workers also suits to the men workers because the ergonomical characteristics like anthropometrical dimensions, muscular strength of women workers, aerobic capacity, etc. were less than men workers hence, a hand

operated maize dehusker cum sheller has been designed developed and fabricated for dehusking-shelling of un-dehusked cobs.

Kumar and Parvathi (1998) studied the energy expenditure of woman laborers for maize shelling using tubular, modified tubular and hand operated maize shellers and they compared the energy expenditure with the traditional method of shelling. For operating the maize sheller they were selected the three female subjects with similar anthropometric parameters and they estimated that for operating the different manual shellers the average energy expenditure was 5-6 kcal min-1. The output of the hand operated maize sheller was 23 kg/h, which is 92% higher than the hand operated, modified tubular and tubular maize sheller and which saves energy expenditure by 80%, 60% and 52%, respectively, as compared to the traditional method. For these shellers the energy requirement to work without fatigue was 2200 kcal/day.

Kumar *et al.* (2002) studied on the basis of ergonomic principles a cost effective and improved design for safe operation of threshers and they interviewed all the injured victims with serious cuts or eliminations taking treatment in nearby hospitals. They analyzed machine parts associated with injuries revealed in 52 cases that the threshing drum and the feeding system, belt and pulley in 6 cases and rest by any other machine part. Chute design has an important bearing on injuries. Increased chute heights and chute cover lengths are recommended for safer operation. Height of platform and work posture were found to influence the injury outcome. Design modifications of the chute and a height difference of platform and chute can reduce the possibility of injury among thresher operators. The modifications are under consideration for changing the thresher design standards by Bureau of Indian Standards (BIS).

Adarsh Kumar *et al.* (2002) developed a grain threshers based on ergonomic design criteria and they resulted that thresher injuries result in crush/amputations of upper limb. Chute design has an important bearing on injuries. Increased heights and chute cover lengths are recommended for safer operations. Height of platform and work posture were found to influence the injury outcome hence the design modification of the chute & height difference of platform and chute can reduce the possibility of injury among threshers operators. The modification are under consideration for changing the thresher design standards by Bureau of Indian Standards (BIS).

Gole and Shahu (2009) designed the threshing chute on the basis of anthropometric dimensions of 95th percentile bellow height of Indian male population and they reported that the minimum height of feeding chute from standing platform was not more than 100-105 cm. They recommended minimum length of feeding chute as 100 cm and 15° inclination with base of feed chute from horizontal in standing position.

Yadav *et al.* (2010) conducted the analytical studies on strength parameters of Indian farm workers and its implication in equipment design. The strength parameters of 105 agricultural workers i.e. 75 male and 30 female were measured on "strength measurement setup" comprising load cell with digital indicator. The average pull strength for male and female workers with both hands in standing posture was found to be 232.3 and 141.7 N respectively whereas the push strength in standing posture was 248.2 and 171.0 N respectively. For designing of manually operated push-pull type equipment these strength parameters were found to play a significant role. For the designing of joystick, gear shift lever and handle lever the right hand push and pull strength for male and female agricultural workers were within the range of 49.7 to 96.5 N which prominently assist. For the designing of clutch pedal, brake pedal, accelerator pedal, pedal operated thresher and other foot operated controls the mean value of maximum right leg strength in sitting posture for male and female workers were 394.2 and 280.5 N, respectively which were found to be a useful. Average torque strength of both hands in standing posture for male and female workers were found to be 209.93 and 117.72 N-m, respectively which can be used in the design of manually operated equipment like chaff cutter, sugarcane crusher, slicer, threshers etc.

Mahatale & Meheta (2012) reported a physiological evaluation of different manually operated maize shelling methods. The mean oxygen consumption rate (OCR), ΔOCR, heart rate (HR), ΔHR for octagonal maize sheller was lowest among all method of maize shelling and highest for beating by stick method. The energy expenditure rate was highest for beating by stick method (3084 kcal / min) and lowest for octagonal maize for octagonal maize sheller (1.52 kcal/min). Energy expenditure rate for shelling cob grain by hand and octagonal maize shelling operation could be scaled in "very light" category of work load. Whereas the hand operated maize sheller and beating by stick method could be scaled as in "light" category of work load. For

maize shelling operations octagonal maize sheller and hand operated maize shelling are superior than shelling cob grain by hand and beating by stick method.

Vyavahare, R.T. and Kallurkar, S.P. (2015) presents an ergonomic evaluation of one of the commonly used maize sheller cum dehusker machine in Maharashtra state. Various key postures of the workers are analyzed and evaluated the risk during the poster. Tools like digital human manikin (DHM) & Rapid Upper Limb Assessment (RULA) are used in this study. Ergonomics analysis of maize sheller cum dehusker was performed for both 5th and 95th percentile male operators. DHM technique can be successfully used to develop the ergonomically sound products based on anthropometric data of user population. The ergonomically designed machines/equipment's can reduce drudgery, increase efficiency, safety and comfort.

Awasthi *et al.* (2015) studied the efficiency assessment of maize sheller in context of drudgery of farm women and they concluded from the study that manual maize shelling is a strenuous activity leading to pain in Neck, back, Shoulders, wrist and finger. Time taken in shelling grain from one cob quiet higher from the maize sheller. Manual maize shelling is moderately heavy work but it can be lightened by the use of maize sheller. Musculoskeletal pain is considerably reduced with maize sheller. If talking in monetary terms, maize sheller saves Rs.90/day. Hence maize sheller is good option for removing maize from the cobs, it saves not only the time but also increases the efficiency of farm women almost by twice and save cardiac cost of worker per unit of output in comparison to the hand shelling. It eliminated the chances of injury to finger and is very comfortable hand-operated tool.

Tripath *et al.* (2016) studied an ergonomic evaluation of hand operated maize sheller on farm women and showed that the hexagonal tubular maize sheller saves almost half the time and increases working efficiency 79.24 per cent and reduces 87.94 per cent drudgery of farm women over traditional practice. The cleaning efficiency was also found to increase 6.6%. Comparison with traditional method, Hexagonal tubular maize sheller shows easy in operation no muscle strain, low cardiac cost, less energy expenditure while using traditional practice. Hence, maize sheller is best option for the women, it saves not only the time but increases the efficiency of farm women twice.

2.5 Performance evaluation of machine

Sandhar and Panwar (1974) studied on machine crop variables influencing shelling of the maize and the study concluded that the shelling efficiency increased with reduction in concave clearance and increase in cylinder speed. The round and rasp bars shells less than the square section members and shelling efficiency decreased with grain moisture content. The grain damage was at lower value of the concave clearance and higher at higher cylinder speed.

Mahmoud and Buchele (1975) tested at all moisture content levels & found that, ear head axis parallel to cylinder axis orientation suffered the minimum damage, followed by ears fed randomly to the cylinder and the highest damage was suffered by ears fed with their axis perpendicular to the cylinder. At 20 to 22% moisture content, the minimum damage for all orientations was obtained. They found that as an increase in moisture content and cylinder velocity the corn kernel damage increased.

Chowdhury and Buchele (1976) found that in analysis of variance for damaged maize kernel percentages kernel moisture content and cylinder speed were highly significant The total damage increased from 26% to 41% as cylinder velocity increased from 450 to 650 rpm & the minimum total damage was sustained at 23% moisture content (w. b.). They found that for cylinder velocities, the mechanical damage by the laboratory sheller ranged between 26.3 and 42%.

Chhabra and Singh (1977) reported that the extent of seed damage was directly proportional to the impact energy and inversely proportional to the seed moisture content.

Gupta *et al.* (1985) conducted studies on the performance of tractor operated combine for maize shelling and the machine was tested on maize with and without husk. The performance of the machine was resulted in terms cylinder loss, capacity, and grain crack age and they concluded that the combine gave satisfactory results at a speed of 500 rpm, concave of 25 mm and feed rate of 3 tons per hour for husked maize. At a cylinder speed of 575 rpm and cylinder concave clearance of 25 mm and the capacity of the machine was found to be 2- 2.5 tons/h satisfactory for the un-husked maize. The damage in case of husked and dehusked maize was found to be 2.72 i.e. maximum and 2%, respectively.

Nalbant (1990) studied the % of maize grain damage caused by the cylinder and concave before and after the grains were shelled from the cob. He investigated that grain damage was caused due to effect of cylinder velocity and grain moisture content. In the shellers cylinder velocity of 7 m/s and 11 m/s were used and maize varieties were shelled with grain moisture content of 15%, 20% and 15%. As an increase in moisture content and cylinder velocity damaged grain percentage were increased. The concave clearance, physical and morphological properties of maize ear and feeding rate effect on the mechanical damage.

Tastra *et al.* (1990) tested that, at three levels of grain moisture content and cylinder speed, three types of local maize shellers were tested. As an increase of the moisture content of maize the effective shelling capacity decreased and increased with an increase of the cylinder speed. With increasing moisture content of maize and cylinder speed mechanically damaged maize increased but the total drying cost decreased.

Ajav and Igbeka (1995) tested the performance of maize sheller using an international standard codes to study the general qualities and design of sheller. The results showed that the shelling efficiency of the sheller varies with feed rate, moisture content, and speed of the shelling unit. The machine had a cleaning efficiency of 93, 87, 85 % and shelling efficiency of 98, 95 and 94% when shelling of maize with a moisture content of 11, 20 and 25%, respectively, with a fan unit speed of 750 rpm and shelling unit speed of 400 rpm. The sheller had a capacity of 260 kg/h. The performance tests proved that at shelling unit speed of 450 rpm the sheller performed better with minimum losses and high efficiency.

Tajuddin and Karunanithi (1996) conceded their research on different types of hand operated maize shellers viz., hand held tubular maize sheller, wooden maize sheller, rotary disc type and bench mounted tubular maize sheller and they compared their performance with manual method of maize shelling. In terms of kernel output, operational cost and performance index bench mounted tubular and rotary disc type maize sheller well performed.

Mudgal *et al.* (1998) have reported about the development of pedal operated maize dehusker, hand operated maize dehusker, pedal operated maize dehusker cum-

sheller, pedal operated maize dehusker-sheller, power operated maize dehusker and power operated maize dehusker-sheller at MPUAT, Udaipur. Dehusker unit was made up of using a pair of rubber and spirally welded MS rod on steel rollers also some serrated blades were used lengthwise to facilitate the dehusking. Half of the cylinder length with rasp bars and the other with rubber strips in octagonal cylinder to act as dehusker and sheller, respectively in one cylinder.

Akubuo (2002) reported that, manual shelling of maize was time consuming and tedious operation hence on Nigerian farms the few existing mechanized shellers were imported and out of reach of the rural farmers that were considered by small holdings and low income. The prime mover was very expensive because the power requirement of such shellers was high. With later harvest date the kernel damage and cob breakup were decreased significantly. Harvest date or maize variety does not effect on shelling capacity, therefore the maize sheller can comfortably be used to shell local maize varieties.

Nkakini *et al.* (2007) reported that manually powered sheller at a speed of 60 rpm can provide a continuous flow and they achieved the shelling effectiveness of 67%, with a throughput of 6.82 kg/h and a low kernel-breakage factor of 0.09. For achieving the stripping this sheller uses abrasion between a rotating shelling-disc and stationary concave compartments. This design was preferred, because of its low breakage factor, low human energy expenditure, rapid operation for the kernels in addition to relatively little dust being emitted during shelling; hence leading to a relatively-healthier local atmosphere for the operator so its wider use was therefore recommended.

Sachin (2008) conducted short duration test for maize thresher and his data resulted that the machine was stable and strong and its speed of operation was 60 rpm with the shelling capacity of the machine was 100.25 kg/h & cleaning and shelling efficiency of 99.37% and 99.95% respectively. The breakage was 0.406 % which was well within the prescribed limit for such machines. Also the labour requirement was reduced by 89.60%.

Singh (2008) developed a whole crop maize thresher using spike tooth cylinder and which is operated by 5.5 kW motor at MPUAT, Udaipur. This machine

performed simultaneously the dehusking-shelling of maize cob and stalk was converted to chaff.

Pathak (2008) reported about a shelling machine which consist a single-phase one hp electric motor and reduction unit of worm and worm gear type in shelling unit. The power from electric motor was transmitted to the worm shaft and then it goes to the shelling unit shaft from gear shaft. For short durations the developed power operated maize sheller was tested in laboratory as well as operations at load & he found that the shelling capacity of the machine was 100.25 kg/h with shelling efficiency of 99.95%.

Ezzatollah Askari Asli-Ardeh *et al.* (2009) studied the performance parameters of threshing unit in a single plant thresher and the results showed that the effects of variety on the on the damaged grains percent and power requirement of the threshing unit were significant at probability level of 1 % & 5 % respectively. The effect of crop moisture content was significant at probability level of 1% on the threshing loss and power requirement. With increasing of drum speed at all varieties, threshing loss decreased. At all drum speed levels, by increasing drum speed, damaged grain percent increased. At each drum speed levels, the mean of power requirement at wet condition of paddy was significantly higher than dry condition of paddy.

Alam and Momin (2009) studied the performance of existing maize shellers in Bangladesh. At present, there are three basic designs of mechanized maize sheller models exist in the country. They are Spike-pinion (SP) type, Spiral rasp-bar cylinder (SBC) type and Parallel rasp-bar cylinder (PBC) type. The design of Binimoy (SP) and Sarker (SP) models is same and technical performances are almost similar and satisfactory. Based on the shelling capacity these models are suitable for small farm holdings. The design of Farida (SBC), Rahman (SBC) and Uttaran (SBC) models is same, except the size. The technical performances of Farida (SBC) and Rahman (SBC) models are slightly better than the Uttaran (SBC) model. This is because of the workmanship and adjustment made by the operator during operation. The technical performances of these sheller models are satisfactory. Based on the shelling capacity and economic returns these models are suitable for large farm holdings and custom-hire service. Farida (SBC), Rahman (SBC) and Uttaran (SBC) models have higher shelling capacity and have higher benefit-cost ratios, Gross Margins (GM) and Net

Margins (NM). Partial Budget (PB) analyses indicate net gain in favor of these models over low capacity models and appear as most beneficial for custom-hire service. Economic analysis suggest that hand sheller could be beneficial for very small farm holdings, Binimoy (SP) and Sarker (SP) models for small farm holdings and Farida (SBC), Rahman (SBC) and Uttaran (SBC) models for medium to large farm holdings and custom-hire service.

Singh *et al.* (2010) conducted an experiment in maize shelling for minimizing the drudgery of farm women. On farm women a tubular maize sheller was introduced and tested and the results obtained that the shelling efficiency of tubular maize sheller was 26 kg/h as compared to hand shelling by which they only could shell 13 kg/h. It saves about 43% in cost of workers per unit of output in comparison to the hand shelling of maize.

Tiwari *et al.* (2010) studied the performance of a rotary maize sheller and they reported that effect of operating speed and cob size on the shelling capacity of the maize sheller. For all categories of maize cobs initially increased in a curvilinear fashion with increase in operating speed up to about 70 rpm and thereafter it was remains almost constant. Further the shelling capacity decreased with increase in maximum diameter of cobs at a particular operating speed. For achieving of higher shelling capacity and shelling efficiency at lower operating torque they recommended that the operating speed of the maize sheller should range between 70 and 80 rpm.

Chilur & Sushilendra (2012) studied the performance assessment & optimization of maize dehusker cum sheller. In present study, the medium sized electric motor (2.23 kW) operated maize dehusker cum sheller (MDS) was developed and evaluated for selected operational parameters, viz. cylinder peripheral speed (6.2, 6.6, 7.1 and 7.6 m/s), concave clearance (20, 25, 30 and 35 mm) and feed rate (400, 600 and 800 kg/h). The machine performance parameters revels that, the dehusking efficiency and shelling efficiency were showed increasing trend with cylinder peripheral speed (S) from 6.2 to 7.6 m/s; whereas decreasing trend against increase in Concave Clearance (C) from 20 mm to 35 mm. The total losses of grains in machine were found lowest between feasible at 25 to 30 mm of C for all feed rates (F). In seed-quality parameters, the decreased germination percentage with increase in S was

observed. The increased broken grains (%) and seed-coat damage (%) were identified with increased in S and decrease in C as well as F. The highest desirability value was obtained for operational parameter combination of S at 7.1 m/s with C at 25 mm under 600 kg/h of F.

D.B. Naveenkumar & K.S. Rajshekarappa (2012) addresses that, the power operated maize sheller was developed and its performance was evaluated. The maize sheller consisted of a cylinder and a concave. The cylinder made up of high carbon steel of size diameter 6.5 cm and length 15 cm, having beaters which rotates along the cylinder and separates grains from the cobs. While the concave was fabricated using 6 mm size mild steel rods. The length of concave was 60 cm with slotted opening size of 7.0cm×1.0cm. The developed power operated sheller had the shelling efficiency, total recovery, breakage and shelling capacity of 98.51, 66.62, 1.60 percent and 402.01 kg/h, respectively, at a cylinder speed of 350 rpm.

Azeez (2017) studied the performance evaluation of a developed maize sheller. A simple, efficient, less tedious machine for shelling maize has been developed. Materials used in fabricating the machine are affordable and locally available. ODEDI maize shelling machine can shell maize of various sizes and has a shelling efficiency is 91.29 % and minimal 0.12 % grain damage with an average shelling capacity of 55 kg/hr.

2.6 Solar photovoltaic system and its utilization

Mekhilef *et al.* (2013) estimated different types of solar energy systems like as solar photovoltaic and solar thermal for pumping water, drying crops, cooling the storages and producing heating/cooling greenhouses. It was been proven that photovoltaic systems and thermal system would be the suitable options in agricultural application and especially for the distant rural area.

Watane & Dafde (2013) studied the automatic solar tracker system. The designed that system which ensures 25 to 30% of more energy conversion than the existing static solar module system. Although ASTS is a prototype towards a real system, but still its software and hardware can be used to drive a real and very huge solar panel. A small portable battery can drive its control circuitry. Therefore by just

replacing the sensing instrument, its algorithm and control system can be used in RADAR and moveable dish antennas.

Vishwa Nath Maurya *et al.* (2015) described a review on photovoltaic solar water pumping system. Solar pumps are available to pump from anywhere in the range of up to 200 m head and with outputs of up to 250 m^3/day. In general photovoltaic pumps are economic compared to diesel pumps up to approximately 3 kWp for village water supply and to around 1 kWp for irrigation. Solar Photovoltaic (SPV) sets represent an environment-friendly, low-maintenance and cost effective alternative to irrigation pump sets which run on grid electricity or diesel. It is estimated that India's potential for Solar PV water pumping for irrigation to is 9 to 70 million solar PV pump sets, i.e. at least 255 billion lit/year of diesel savings.

Jagadale *et al*. (2017) studied the solar photovoltaic operated paddy winnower and they were observed at the feed rate of 120 kg/h overall output capacity at 30 cm distance was found to be maximum 119.77 kg/h, as compared to output capacity at 20 cm was 119.30 kg/h and 10 cm was 118.74 kg h-1) respectively. The weighted average cleaning efficiency at 30 cm distance (93.00%) was found to be maximum as compared to cleaning efficiency at 20 cm (89.13%) and 10 cm (62.24 %), respectively. The average cleaning efficiency of SPV operated paddy winnower was more than 90% with low operating cost of 0.25 Rs kg^{-1}. The developed SPV operated paddy winnower provided the solution for on farm paddy winnowing without dependency on natural wind velocity and secure electricity supply.

Samreen *et al.* (2017) developed the solar power operated paddy winnower. Performance was carried out at three feed rates for PLR 1100 type paddy variety 171.43 kg/h , 200 kg/h and kg/h and for RGL 2537 type paddy variety 200 kg/h, 240 kg/h, and 267 kg/h respectively. The paddy winnower was mounted with 0.25 hp dc motor and connected to a 150 watt photovoltaic solar panel. The highest cleaning efficiency of about 94% was achieved for feed rate 171.43 kg/h at main outlet. The highest output capacity of 223.47 kg/h was achieved at feed rate of 267 kg/h. It was observed the cleaning efficiency of both the paddy varieties was decreased on increasing the feed rate.

2.7 Cost economics of operation

The development of the following equipment related to dehusking and dehusking-shelling of maize are

1. Hand operated maize dehusker
2. Pedal operated maize dehusker
3. Pedal operated maize dehusker-cum-sheller
4. Pedal operated maize dehusker-sheller
5. Power operated maize dehusker
6. Power operated maize dehusker-sheller

Tastra *et al.* (1992) tested at three levels of grain moisture content and cylinder speed, three types of local maize shellers and the results indicated that the optimum moisture content of maize for shelling, using sheller types SLM, KWT and TMO, was 32.5, 35.0 and 35.0% (w. b.), respectively. The minimum total costs of shelling and drying were Rs. 3,573/t, Rs. 3,176/t and Rs. 3,315/t while the optimum grain mechanical damage was 18.4, 17.8 and 21.1%, respectively.

Swapan *et al.* (2007) compared power operated maize sheller with manual shelling. The results indicated that for 25% internal rate of return (IRR), power operated maize sheller appearance like a wise investment of 5-8 acres. They stated that, it makes economic sense to operate shellers at higher capacities and along with the high capital cost to save large numbers of labour to farmers and maize sellers hence power operated maize sheller can able to overcome the shortage of expensive labour during peak harvesting season and it saves the cost.

Singh *et al.* (2012) gives that cost of fabricating (manufacturing) the final prototype came to Rs.14, 500/ (290 $). The cost of getting one kg maize grain with hand operated maize dehusker sheller came to Rs.1.15 Fixed cost of maize dehusking shelling per kg maize grain with hand operated maize dehusker-sheller consist of depreciation cost using straight line method, interest on investment, insurance and shelter cost of machine is Rs.1,305, Rs. 997.5, Rs. 290 respectively. Hence total fixed cost Rs. /annum is Rs. 2,592.5. Variable cost of maize dehusking shelling per kg maize grain with hand operated maize dehusker –sheller consist of repair and

maintenance costs, (Rs. / annum 30 % of cost of maize dehusker sheller), Workers charge (Rs. / annum No. × h × charge) is Rs. 4,350, Rs. 6,800. Hence total variable cost (TVC) / annum, Rs. 11,150.0.

Matpathi (2015) studied the virtual prototype modelling and analysis of low cost hand operated maize desheller. The analysis of data collected during the short duration test revealed that the machine is stable and strong and its speed of operation 60 rpm was quite satisfactory. The shelling capacity of the machine was 24 kg/h with shelling efficiency of 99.95 % and cleaning efficiency of 99.37%. The breakage percentage was 0.406 which is well within the prescribed limit for such machines. The labour requirement was reduced by 89.60% using this machine.

Chilur R and Sushilendra Kumar (2017) calculated the total production cost of MDS was Rs. 34,500. The dehusking and shelling hiring price were 5/q based on machine feed rate of 600 kg/h with 250 annual working hours (8-year life time) and considering annual cost of operation (Fixed + running = Rs. 7762.5 + Rs. 12 118.7). The payback period (Investment/net annual return = Rs. 34500/ Rs. 46064) was found to be 0.74 year. The benefit cost ratio (Discounted return/ discounted cost = Rs. 441,597/Rs. 196512) was found to be 2.24.

Kumar *et al.* (2018) studied the cost of use of machine & calculated with power tiller as prime mover has been found to be Rs. 371/hr or Rs. 68.70 / q, whereas, in traditional method, it was 375.00 Rs. /q. There is net saving of Rs. 306/q with respect to manual threshing.

CHAPTER III

MATERIALS AND METHODS

This chapter briefly describes the methodology used for design, development and performance evaluation of a mobile solar powered maize dehusker cum sheller based on considerations of properties related to dehusking and shelling of maize, the details of procedure adopted for designing and development of mobile unit, maize dehusker cum sheller and the performance evaluation of developed machine for optimizing operating parameters and analytical methods followed for analysis of data collected during the performance evaluation trails have been presented in this chapter. The performance evaluation of developed solar powered mobile maize dehusker cum sheller has been carried out in the College of Agricultural Engineering and Technology, Bhubaneswar.

The methodology adopted in designing and developing of solar powered mobile maize dehusker cum sheller has been divided in to following sections.

3.1 Physical properties of maize
3.2 Design and development of mobile unit
3.3 Design and development of maize dehusker cum sheller
3.4 Performance evaluation of mobile maize dehusker cum sheller
3.5 Cost economics of mobile maize dehusker cum sheller

3.1 Physical properties of the maize

For the study of physical properties of maize, the maize variety Odisha Maize Hybrid (OMH 14-27) procured from the field of college of agriculture, Bhubaneswar, Odisha, India. After the procurement of maize cobs were dried in sun for 10-12 days for reducing of moisture content. The maize cobs were manually dehusked, shelled and cleaned to remove all foreign matter such as surface dust, dirt, stones and chaff then sample of maize grains were took for the study of properties.

Physical properties are useful and required in the design and operation of various equipment employed for agricultural operations (Sahay and Singh, 1994). The present investigation contains maize dehusking and shelling of grain. The

physical properties of maize variety (OMH 14-27) considered for the development of maize dehusker cum sheller and presented below. The development of dehusker cum sheller for maize cobs requires the knowledge of physical properties such as shape and size, sphericity, surface area, bulk density, true density and porosityof maize grains.

The methods followed for determining the physical properties of maize were to decide dimensions of the different machine components, dimensions of the maize cob and grains, sphericity, surface area, moisture content, bulk density, true density and porosity were determined as per the standard procedure.

3.1.1 Dimensions of the maize cob and grains

For the study 100 randomly picked cobs were selected from a OMH 14-27 variety of the maize. The length of un-dehusked cob (mm),diameter of un-dehusked cob, weight of un-dehusked cob (g) and linear dimensions of maize grains (length, width, thickness) were determined using digital vernier caliper and weighing balance with an accuracy of 0.01 mm and 0.01 g, respectively (Tarighi *et al*., 2011).

3.1.2 Arithmetic and geometric mean diameter

For a OMH 14-27 maize variety, the length, width, and thickness were measured on randomly selected 100 maize grains. The length, width and thickness of grains were measured using a digital caliper with an accuracy of 0.01 mm. The arithmetic mean and geometric mean diameter were calculated by the three axial dimensions. The arithmetic mean diameter (D_a) and geometric mean diameter (D_g) of the grains were calculated by using the following equations (Chilur and Sushilendra, 2016).

$$D_a = (L+W+T)/3, \text{ mm} \quad (3.1)$$

$$D_g = (L \times W \times T)^{1/3}, \text{ mm} \quad (3.2)$$

Where,

L = Length, mm

W = Width, mm

T = Thickness, mm

3.1.3 Sphericity

The sphericity (Φ) is defined as the ratio of the surface area of a sphere with the same volume as the grain to the surface area of the grain. This measurement was determined using the following equation (Chilur and Sushilendra, 2016).

$$\emptyset = \frac{(\boldsymbol{L} \times \boldsymbol{W} \times \boldsymbol{T})^{\mathbf{1/3}}}{\boldsymbol{L}} \quad (3.3)$$

3.1.4 Surface area

The surface area (S) of an agricultural product is generally indicative of its pattern of behavior in a flowing fluid such as air, as well as the ease of separating extraneous materials from the product during cleaning by pneumatic means. The surface area of grains were found by analogy with a sphere of the same geometric mean diameter. The surface area of grains were calculated by using the following formula (Chilur and Sushilendra, 2016)

$$S = \pi (D_g)^2, \text{ mm}^2 \quad (3.4)$$

3.1.5 Bulk density

The bulk density (ρ_b) of the grains was determined by measuring the weight of known volume of grain sample. The following formula was used for calculation of bulk density of grain in g/cm^3

$$\rho_b = M/V, \text{g cm}^{-3} \quad (3.5)$$

Where,

M = Mass of the grain sample, g

V = Volume of glass jar sampler, cm^3

3.1.6 True density

True density is used in design of hoppers, storage bins, and separation of desirable materials from impurities. The apparatus used for measuring true density of grains consists of a 100 ml measuring jar and a weighing balance. 50 ml of toluene was taken in a measuring jar. A known weight of grain sample was poured to the measuring jar and rise in the toluene level was recorded as the true volume of the grains without void space. The true density of the grain was calculated by using the following formula (Mohsenin, 1970).

$$\text{True density} = \frac{\text{Weight of grains,g}}{\text{volume of grains excluding void space }, cm^3} \qquad (3.6)$$

Fig. 3.1 Measurement of true density

Fig.3.2 Measurement of bulk density

3.1.7 Porosity

The porosity, is determined from bulk density and true density values using the following expression (Mohsenin, 1970 and Thompson and Isaacs, 1967). The porosity was calculated by following formula

$$\boldsymbol{\varepsilon = \left(1 - \frac{\text{Bulk density}}{\text{True density}}\right) \times 100} \qquad (3.7)$$

3.1.8 Moisture content of grains

The moisture content of maize grains were determined by oven drying method. The samples were kept for 24 hours at 105 ˚C temperature in oven according to IS code 70521973 and moisture content was calculated accordingly.

$$\text{Moisture content of grains} = \frac{W_1 - W_2}{W_1} \text{x}100\ , \%} \qquad (3.8)$$

Where, W_1 = Weight of the wet sample, g

W_2 = Weight of the dry sample, g

3.2 Design and development of mobile unit

It consist of detail information about mobile unit, all components of mobile unit and design and development of mobile unit.

3.2.1 Details of mobile unit

The designed and developed mobile unit has named as OMSPAM (OUAT Multipurpose Solar Powered Agri Machinery).It was designed and developed by department of Farm Machinery and Power, CAET, OUAT, Bhubaneswar. This machine was developed in order to flourish farm machinery to the root level of farmers. Its price is also minimum so that a maximum farmers can also afford it.

Fig 3.3 OMSPAM (OUAT Multipurpose Solar Powered Agri Machinery)

The developed OMSPAM is multipurpose mobile unit. Multipurpose means it can be used for different purposes, now mobile unit is using for maize dehusker cum sheller machine but in future it is also will be used for pulses threshing, millet threshing, paddy threshing, groundnut decorticator, juice maker machine and water pumping purposes. In a mobile unit machine is fitted at one side (rear side) of unit. Person will stand outside the unit and it will operate a machine. Only one person is

required for operating a unit and machine so its saves labour cost. Solar panels are fitted on a roof top of machine and manual tracking is also possible. One solar panel is fixed and other is moved by manually for getting of more solar radiations. Batteries and controller are situated inside a unit. Inside a unit seat, fan, light, mobile charging plug is also provided for operators comfort.It is a self-propelled mobile unit which can be moved to the field for use on site resulting reduction on transportation cost.It uses renewable source of energy and saves a cost on fuel, electrical energy.

Design and fabrication of mobile unit is very simple. It can be a source of employment to people at their local community. It is a more useful in areas where availability electricity is a major problem. It gives a significance in many rural locations of most developing countries where grid connected electricity is either unavailable or unreliable or too expensive so using energy from source is beneficial. The battery backup system enables the unit to work during cloudy weather and also during night. It has dual charge system (AC & DC). It can be easily movable in small area is very useful in villages. It checks the farmer to depend on larger mills rather provide door to door service. The manual solar tracking system allows a significant increase in energy production and therefore improve project profitability. It is easy to handle and less chance of accident. It can be also used to carry goods from ones fields to storage place during harvesting period. It has compact shape so that it does not require larger space. It has facility to run small fan and light during working in hot climate and night respectively. It is very easy to drive so no skilled labour is required. Detailed technical specification of OMSPAM is given in following table 3.1.

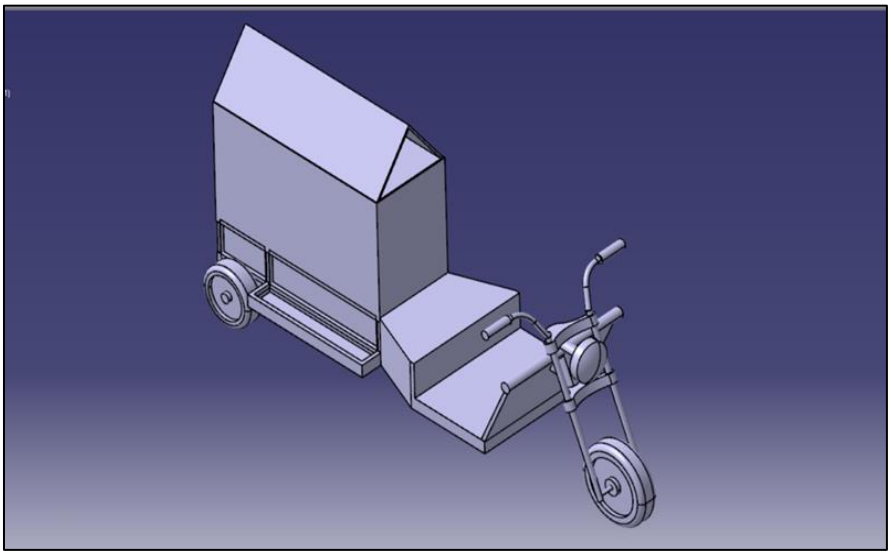

Fig 3.4 Isometric view of OMSPAM (Mobile unit)

Table 3.1 Detailed technical specification of OMSPAM

Particulars	Specification
Body size	2.06m length, 0.8m width, 1.92m height
Accommodation	One driver and any small machine
Weight of rickshaw	250 kg (including solar panel and batteries)
Loading capacity	380 kg
Ground clearance	0.6m
Gradeability	7 degree gradient start and move with a speed of 5 KMPH
Range	120-130 km with solar panel(on sunny day)
Maximum speed	35 KMPH (25 KMPH fully laden)
Reverse gear	Provided
Solar panel	250 Watt, 30.33 V, polycrystalline of 2 panels
Chassis	1300 × 650 × 150 mm (L × W × H)
Cabin	1440 × 945 ×1174mm (L × W × H)
Battery	4 nos. ,12 V, 100 AH
DC motor	48V, 1000W, brushless
Motor controller	For starting, accelerating, decelerating ,driving, stopping (45A±1A)
Solar charge controller	MPPT, 48 V
Brakes	For service and parking
Throttle (Accelerator)	high, low, forward, reverse speed
Differential	For turning
Instrumental panel	Speedometer, battery charge indicator and start/stop switches on the dashboard
Tyre's	3 nos. 12inch standard and space for 1 no spare type
Electrical battery charger	65 V, 5 A
Charging time	Recovered by 1-2 hours/80-100 % recovered by 6 hours (more)

3.2.2 Components of mobile unit

The following components were used for the development of mobile unit.

3.2.2.1 Solar panel

For the development of mobile unit two solar panels are fitted on the roof top of unit in 56°inclined manner. One solar panel is fixed and other panel is adjustable. It can be moved up and down direction by manually for getting of maximum solar radiation for increasing efficiency of panel. Panels are connected in series which are further connected to MPPT type solar charge controller. All detailed specifications of solar panels were given in following table3.2.

Table 3.2 Technical specification of solar panel

Sl. No.	Particulars	Specification
1	No. of solar panels	2
2	Type of solar panel	Polycrystalline
3	Maximum power	255Wp
4	Panel connection	Series connection
5	Total power	2×255Wp= 510Wp
6	Open circuit voltage	7.69V
7	Short circuit current	8.89A
8	Voltage at maximum power	30.33V
9	Total voltage of 2 panel	30.33V+30.33V=60.66V
10	Current at maximum power	8.41A
11	Solar panel efficiency	16%
12	Panel dimensions	100 × 167×4cm
13	Angle of panel position	56^{0}

3.2.2.2 Solar charge controller

A charge controller, charge regulator or battery regulator limits the rate at which electric current is added to or drawn from electric batteries. It prevents and protects against overvoltage which can reduce battery performance or lifespan, and may give safety against risk. It also gives a protection against completely draining (deep discharging) a battery, to protect battery life. An MPPT (Maximum Power Point Tracking) type solar charge controller is used having capacity of 48 V. It takes the power from solar module and provide constant power to the batteries.

3.2.2.3 Battery setup

A lithium-ion battery is a type of rechargeable batteries are used in which lithium ions move from the negative electrode to the positive electrode during discharge and back when charging. A batteries of 12 V, 100ah are used to connect in series so gives a 48 V battery storage system.

3.2.2.4 Cabin

Cabin is made up of GI sheet of 18 mm and iron square bars of size35×35×20mm. In a cabin machine was fitted. Inside a cabin seat, fan, light, mobile charging plug is also provided for operators comfort. Batteries and solar charge controller were fitted below seat in a cabin so it will be protected against rain, thief. The dimension of cabin is 1440×945×1174 mm and dimension of seat is 436× 945 ×335mm which provided in inside the cabin.

3.2.2.5 Motor and motor controller

A DC motor is any class of rotary electrical machines that converts direct current electrical energy into mechanical energy. A 1000 W DC motor is used in a mobile unit. A motor controller or DC controller is used for motor protection, speed control (maintain constant speed) and for torque control. A motor controller is connected in between battery setup and motor. Current and voltage of controller is 45A ± 1Aand 42V ± 1V respectively.

3.2.2.6 Steering and throttle

Steering consisting of an instrument panel. Speedometer, battery charge indicator and start/stop switches on the dashboard of instrument panel are given. In a steering multimeter and speedometer are inbuilt connected so it shows battery charge percentage and speed of mobile unit on a dashboard. Make of steering is Sodyco Company. Throttle is also called as accelerator and it gives a high, low, forward, reverse speed. Accelerator is provided at right hand side of steering.

3.2.2.7 Differential and differential shaft

Differential is used at the time of turning so it gives a less speed to inner wheel of mobile unit than the outer wheel. Differential is attached to DC motor and differential shaft. Differential shaft transfers a power to both rear wheels.

3.2.2.8 Chassis

Chassis is a base frame of mobile unit and which supports the unit in its construction and use. Dimension of chassis is 1300×650×150mm and the height of chassis from the ground is 450mm. Material used for chassis formation is MS square bar of size is 35×35×20mm.

3.2.2.9 Brakes

One pedal and one hand brake were provided in a mobile unit. Pedal and hand brakes both are connected with only one linkage to the rear wheel. Hand brake which plays an important role while parking of vehicle and pedal brake is used as service brake.

3.2.2.10 Wheels

One front and two rear wheels were provided in a mobile unit. Each wheel carries maximum load of 212 kg at 250 k pa of pressure. Specification of wheel was given in table 3.3.

Table 3.3 Specification of wheel

Sl. No.	Particulars	Specification
1	No of wheels	3
2	Tyre's Make	TVS
3	Product dimensions	10×10×10 cm
4	Specification of tyre	90/90-12 54 J
5	Sectional width	90 mm
6	Aspect ratio	0.9
7	Rim diameter	12 inch
8	Load index rating	54
9	Speed rating	J (up to 100 km/h)

3.2.2.11 Electric charger

The electric charger is used to charge mobile unit by electrically. This intelligent charger is capable of operating at wide input AC voltage range of 170-300VAC. It is efficient, compact in size and has 4 stage battery charging algorithm. The technical specification of electrical charger is given in following table 3.4

Table 3.4 Technical specification of electric charger

Sl. No.	Particulars		Specification
1	Charger make		Sodyco
2	AC input	AC input voltage- range	170-300 VAC
		AC input voltage-nominal	230 VAC rms
		AC input frequency	47-53 Hz
		AC input current-max.	5.0A rms
3	DC Output	Max. DC output voltage	65 V ±0.5 V
		DC output current	12 A ±0.5 A
4	Operation	AC input ON LED	Red LED
		Battery charge ON LED	Green LED blinking(any)
		Charge complete	Red LED Off, all green LEDs constant

3.2.3 Energy flow of mobile unit

The solar radiations direct incident on the solar photovoltaic panel. Then the 12 V batteries of 4 in numbers drawing a power from the solar panels. The solar charge controller is provided in between the solar panel and battery setup for providing of constant power to the battery, it protects the batteries life. The DC motor and accelerator takes a power from battery setup through a DC controller. Then from the motor power is transmitted to the wheel through differential shaft which is connected to differential unit. The energy flow path of mobile unit is given in following fig.3.5.

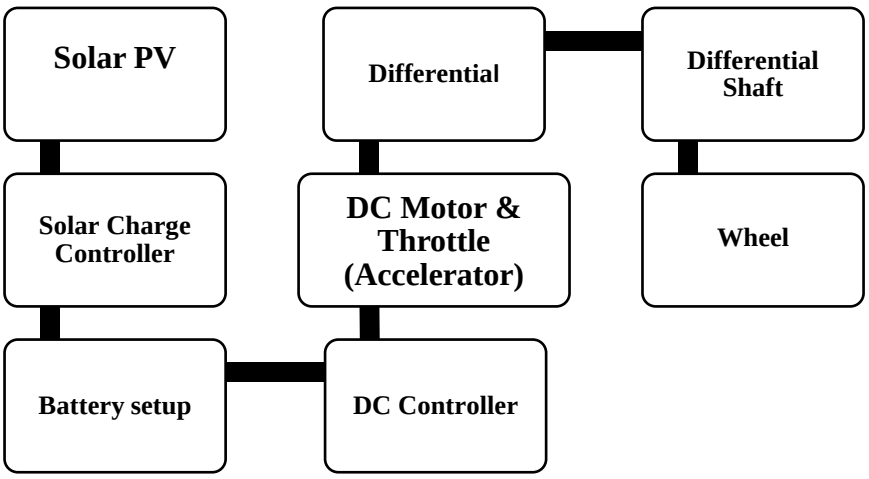

Fig. 3.5 Energy flow of OMSPAM (mobile unit)

3.2.4 Design of mobile unit

It consist a solar PV system design which can be done by following steps

1) Load estimation
2) Estimation of number of PV panels
3) Estimation of battery requirements
4) Solar charge controller sizing

Assumptions

- PV panel power rating=255Wp
- Battery voltage used for operation= 12 volts, battery capacity=100Ah
- Operating factor= 0.75(varies between 0.6 to 0.9)
- Mismatch factor= 0.85
- Day of autonomy= 2 days

3.2.4.1 Load estimation

- Power required: 0.5 hp dc motor = 370W
- Working hrs. = 6hrs.
- Total watt-hrs. rating = connected load(watts)×operating hrs. (3.9)

  = 370×6=2220 watt-hrs.

3.2.4.2 No. of solar panels required

Actual power output of a PV panel

= peak power rating × operating factor × 6hrs/day × mismatch factor (3.10)

= 255×0.75×6×0.85

= 975.375 watt-hrs.

No. of solar panel required = total watt-hrs. Rating/actual power output (3.11)

= 2220/975.375

= 2.27 = 2 (round figure)

3.2.4.3 Battery requirement

Total amp-hrs. required

= total watt-hrs. rating × day of autonomy/depth of discharge × battery voltage (3.12)

= 2220×2/0.85×12 = 435.29

No. batteries required = total amp-hrs. Rating/battery rating under use (3.13)

= 435.29/100

= 4.35 = 4(round figure)

3.2.4.4 Sizing of solar charge controller

Capacity of charge controller = no. batteries× voltage of battery (3.14)

= 4×12

= 48V

3.3 Design and development of solar powered maize dehusker cum sheller

During the development of solar powered maize dehusker cum sheller, it was kept in mind that the equipment should be suitable for marginal and small farmers for capacity in between 20 to 60 kg/h. The methodology and procedure adopted in development of different components of maize dehusker cum sheller are presented in this section under following subsections.

3.3.1 Maximum permissible feed rate

$$q = \frac{\text{Power available (kW) x 1000}}{\text{3600 x Energy required (kW h/t)}} \quad (3.15)$$

Energy required for threshing maize crop by mechanical means = 2-3 kW-h/t (Varshney *et al.* 2004). Taking energy required = 3 kW-h/t and power available 0.370 kW

$$= \frac{0.370\times1000}{3600\times3}$$

= 0.0342 kg/s = 123.33 kg/h

3.3.2 Design for dehusking and shelling unit and mechanism

Axial flow system was adopted in the present design by giving a two helical louverers (at the feeding side) on a middle shaft to pass dehusked maize cobs easily to the outlet side for shelling purpose. This feature with the axial flow threshing system helps in getting more retention time for undehusked cobs during continuous feeding. Also this system consumes low energy because it does not make fine straw in

comparison to spike tooth and rasp bar threshers. Moreover, with dehusker cum sheller, there is no necessary of making fine straw so the axial flow system was opted (Singh *et al.*). On a half-length of machine dehusking is done and other half part of machine is used for shelling purpose. Dehusking is done with the help of nitrile rubbers which was placed in zig-zag manner on two side shafts of a middle shaft. The dehusking is done by shearing and tearing force which is created in between cuts given on a rubbers and cobs. Also a flat plate is given in inside section of a top cover on rubber due to which cobs pressed along the shaft and rubber so dehusking is done. For the shelling of maize, arrangement is given inside a top cover. A section of top cover after dehusking part consist a half circular section with a taper, consists of9 number of cuts on both side of a section which helps in removing of a grains from cobs. The size of cut is 25 mm wide, 25 mm depth and spacing between the cut is 25 mm.

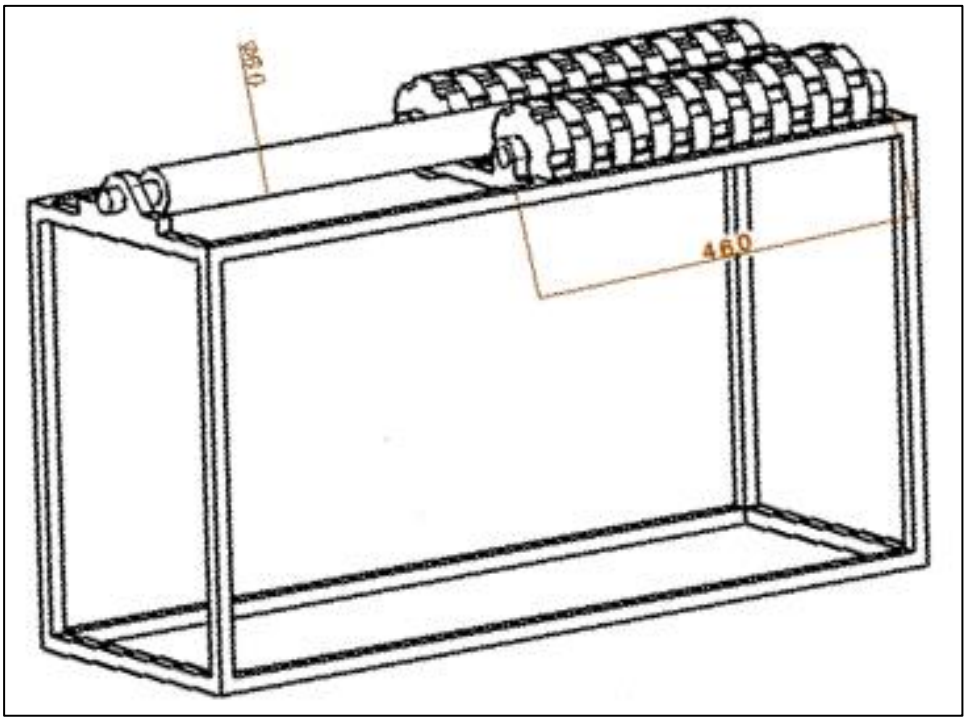

Fig. 3.6 Isometric view dehusking unit

3.3.2.1 Dehusking elements

The nitrile rubbers were given for the dehusking purpose of maize cobs which are placed in zig zag manner on two solid shafts. Solid shafts with rubber were placed on a both side (left and right) of a middle shafts. The nitrile rubber is opted as

dehusking element and it also help in reducing of energy requirement in the operation of dehusking the undehusked cobs. The size of one rubber was consist a 127 mm outer diameter and 25 mm inner diameter and thickness of rubber is 30 mm. one rubber consisting of 6 cuts of size is 10mm depth and width is 15mm. Total number of rubbers are placed has 56 no. on two solid shafts of diameter 25 mm and length is 460 mm. The rubbers were placed in between 2 circular plates. One side of solid shaft on which rubbers were placed is rotating due to the louverers provided on rotating middle hallow shaft, while another side of solid shaft with rubber gives a support to the cobs for dehusking.

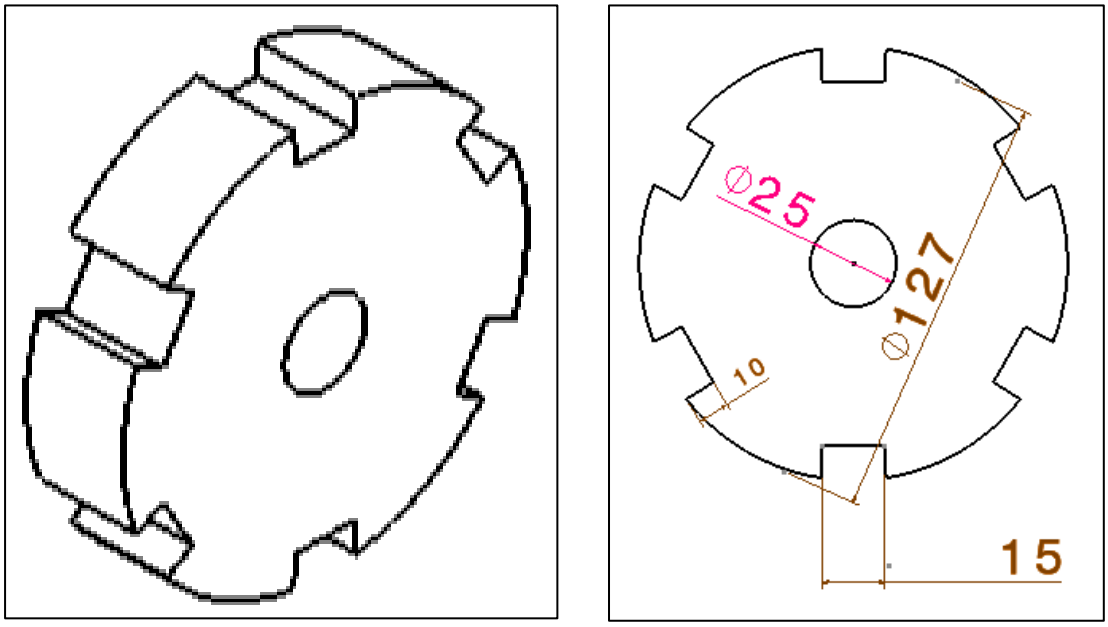

Fig. 3.7 Isometric and top view of nitrile rubber

3.3.3 Top cover and feeding chute

In order to enhance the easy flow of the plant mass and create more abrasion, the top cover was made in hexagonal shape of MS sheet (1060mm length × 300 mm width× 200mm height) with feeding chute (trapezoidal shaped) to feed cobs by gravity flow. A top cover also consist a shelling arrangements on its half-length i.e. 500mm. Half circular taper section of cast iron with 9 number of cuts on both side of a section is given. Inner side circular diameter is 90 mm and outlet side circular diameter is 50 mm and spacing between the cut is 25mm with cut size of width 25mm & depth is 25mm.

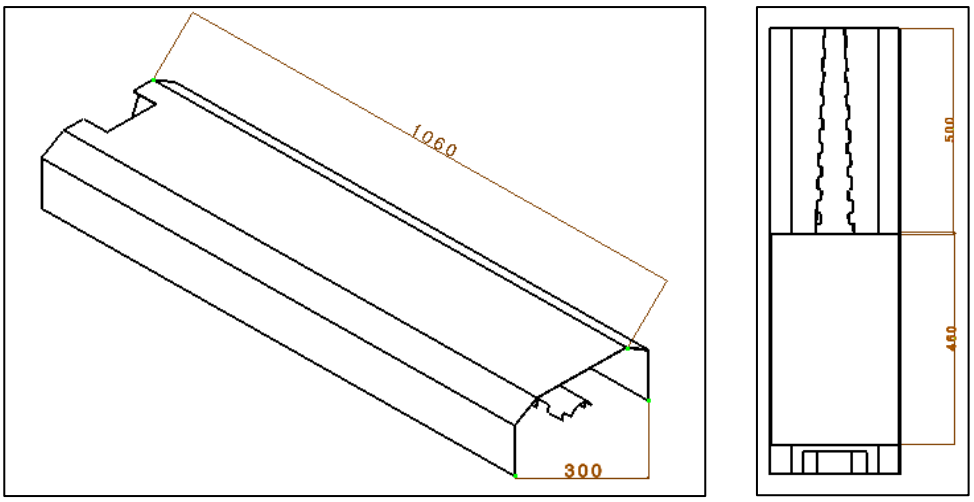

Fig 3.8 Isometric and rear view of top cover

3.3.4 Outlets

There are three outlets were given viz. husk outlet, grain outlet, cob outlet. Husk was removed from the husk outlet. The open rectangle with trapezoidal shaped MS sheet of top width 460 mm and bottom width of 310mm were provided at bottom of rubber assembly at 20° inclined manner along middle shaft for collecting husk from either side of cylinder to centre after dehusking. The unit conveys the grains to other inclined open rectangle with trapezoidal opening unit (500 mm top width x 270 mm bottom width), which was mounted at an angle of 20° from ground surface. The cobs are removed from the circular shaped cob outlet (60mm diameter) which is given at top cover.

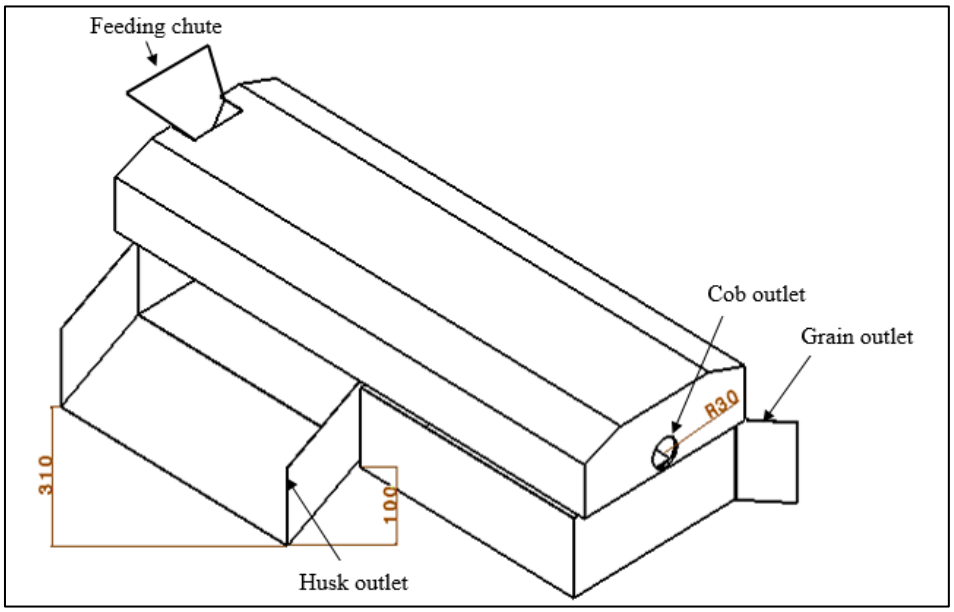

Fig 3.9 Isometric view of outlets with top cover

3.3.5 Main frame

For supporting of threshing assembly and power transmission unit, a rectangular shaped frame was fabricated of 1070mm (length) × 365 mm (width) × 560mm (height) made of 35× 35 ×5mm and40 × 40 ×5mm MS angle.

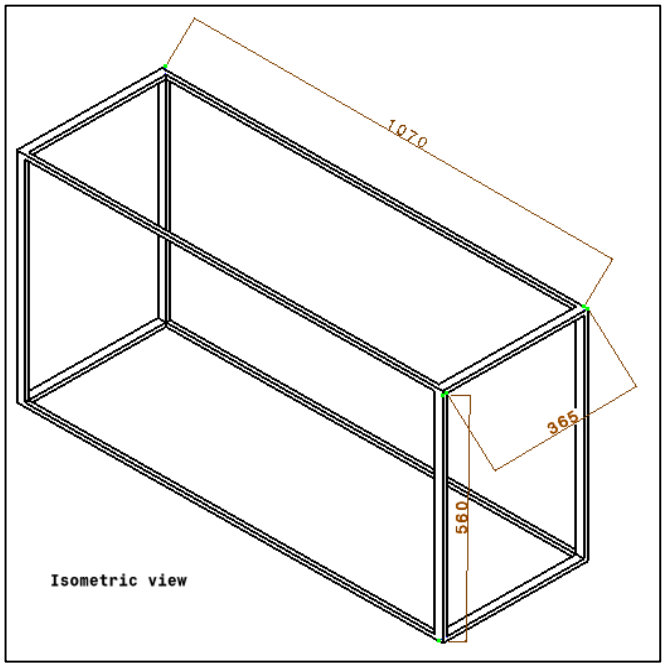

Fig 3.10 Isometric view of frame

3.3.6 Power transmission system

V belt and pulley drive system was selected for power transmission.

Rated power developed by DC motor = 0.5 hp

Rated speed of DC motor drives pulley = 1500 rpm

Speed of cylinder shaft = 530 rpm

The diameter of the pulley (d_2) on shaft was determined as following,

$$\frac{d_2}{d_1} = \frac{n_1}{n_2} \qquad (3.16)$$

d_1 = diameter of pulley on motor, 63.5 mm

n_1 = speed of motor, rpm

n_2 = rotational speed of shaft, rpm

$$d_2 = \frac{1500}{530} \times 63.5 = 179.71\text{mm}$$

Hence a pulley of 180mm size was selected and provided on the shaft.

3.3.6.1 V belt design

A belt provides a convenient means of transferring power from one shaft to another. Belts are frequently necessary to reduce the higher rotational speeds of motors to lower values required by mechanical equipment (Spotts, 1985). The belt driver relies on frictional effects for its efficient operation. When the belt connecting two pulleys is stationary, the tensions in the two portions of the belt are equal but when torque is applied to the driving pulley, one portion of the belt is stretched and the other portion becomes slack.

The properties of a V-belt of A cross section viz., density, cross sectional area and allowable tensile stress (σ) were taken as 1000 kg m^{-3}, 104 mm^2 and 2.5 MPa (Khurmi and Gupta, 2005). A groove angle (2β) of 35° pulley of 0.25 was considered as coefficient of friction (μ) between pulley and belt (Khurmi and Gupta, 2005).

The mass of the belt per unit length,

m = Cross section area, m^2 × Length, m × Density, kg/m^3 (3.17)

m = 104 × 10^{-6} × 1 × 1000

m = 0.104 kg per meter length of belt

The centrifugal tension of the belt (Tc) given by;

T_c = m × v^2 , N (3.18)

Where,

m = mass of the belt per meter length, N

V = Velocity of the belt, m/s

= (π × D × N)/60

= 3.142 × 63.5 ×1500/60×1000 = 4.99 = say 5 m s^{-1}

So, T_c = 0.104×9.81×5^2

= 25.50 N

Maximum tension in the belt,

T= σ, N/mm^2× cross sectional area of belt, mm^2 (3.19)

Where,

σ = Allowable tensile stress = 2.5 MPa

T = 2.5 × 10^6× 104 × 10^{-6} = 260 N

Therefore, tension in tight side of the belt,

T_1 = T-Tc (3.20)

= 260 – 25.50 = 234.5 N

The tension in the slack side of the belt (T_2) calculated as follows

$$\text{Sin}\alpha = \frac{d_2 - d_1}{2\,C} = \frac{180-63.5}{2x450} = 0.129 \qquad (3.21)$$

$$\alpha = 7.41°$$

Where,

α = Angle of contact/non-contact beyond/ before the half circle plain of bigger/ smaller pulley

C = centre to centre distance of smaller (drive) and larger (driven) pulley.

Angle of lap on smaller pulley (i. e. pulley on motor shaft) θ,

$$\theta = 180 - (2 \times 7.41) \quad = 165.18° \qquad (3.22)$$

$$= 165.18 \times \pi / 180 = 2.88 \text{ rad.}$$

To find tension at slack side, following formula were used;

$$2.303 \log \left(\frac{T_1}{T_2}\right) = \mu \times \theta \times \text{cosec}\beta \qquad (3.23)$$

$$= 0.25 \times 2.88 \times \text{cosec}17.5°$$

$$\frac{T_1}{T_2} = 10.96$$

$$T_2 = 234.5/10.96 = 21.35\text{N}$$

The power transmitted by belt;

$$= (T_1 - T_2)\ v = (234.5 - 21.35)x5 \qquad (3.24)$$

$$= 1065.75 \text{ W} = 1.065 \text{ kW}$$

Therefore number of V-belts required to transfer power to driven pulley from drive pulley was calculated by following this formula;

$$= \frac{Max.\ power\ transmitted}{Total\ power\ per\ belt} \qquad (3.25)$$

$$= \frac{0.370}{1.06} = 0.35 = \text{say } 1$$

The length of open belt was calculated based on the diameters of the drive and driven pulleys and centre to centre distance between the pulleys. The formula used for calculating the length of the belt is,

$$L = \Pi(r_2 - r_1) + 2c + \frac{(r_2 - r_1)^2}{C} \qquad (3.26)$$

$$= \Pi\ (90 - 31.75) + 2\times 450 + \frac{(90 - 31.75)^2}{450}$$

$$L = 1090.53 \text{ mm}$$

3.3.6.2 Shaft design

Shaft which is supported on bearings on both ends. Assume that a V-belt drive pulley weighing 1.9 kg is mounted on the shaft with an overhang of 20 cm. The thresher is to be powered by 0.5 hp or 373 W DC motor and power from the motor to threshing shaft is transmitted through V-belt system. The shaft of maize dehusker cum sheller is designed as under.

We know that torque transmitted by the shaft,

$$T = \frac{P \times 60}{2 \times \Pi \times N} \quad (3.27)$$

Where,

P= power of electric motor, W

T = Torque in N-m

N= rpm (assume 530 rpm for threshing shaft)

T= 370×60/2×3.14×530 = 6.67 N m

We know that total vertical load acting on the pulley,

$$W_T = T_1 + T_2 + W \quad (3.28)$$

Where,

W= weight of pulley, 11.77 N

$T_1$and T_2 = tensions in the tight side and slack side of the belt respectively, N

W_T= 234.5+21.35+11.77 = 267.62 N

Bending moment acting on the shaft,

$$M = W_T \times L = 267.62 \times 1100 = 294382 \text{ N} \quad (3.29)$$

Since thresher shaft is loaded in bending and torsion, so equivalent torque (T_e) is given by

$$T_e = \{(K_m \times M)^2 + (K_t \times T)^2\}^{0.5} \quad (3.30)$$

K_m = combined shock and fatigue factor for bending for gradually applied load (1.5)

K_t = combined shock and fatigue factor for torsion for gradually applied load (1.0)

$T_e = \{(1.5 \times 294382)^2 + (1 \times 6.67 \times 10^3)^2\}^{0.5}$

T_e = 441623.37 N m

We know that equivalent torque transmitted by the hollow shaft

$$T_e = \frac{\Pi}{16} \times f_s \times {d_o}^3 \times (1 - K^4) \quad (3.31)$$

Where,

f_s = allowable shear stress for mild steel shaft, 35 N/mm^2

d_o = outer diameter of shaft, mm

K = ratio of inner to the outer diameter of shaft, 0.9

$$T_e = \frac{\pi}{16} \times 35 \times d_o^3 \times (1 - 0.9^4)$$

441623.37= 2.36 d_o^3

d_o= 57.19 mm say 60 mm

d_i= K × d_o = 60× 0.9 = 54mm

From above considerations, the designed shaft diameter when shaft subjected to fluctuating loads found to be 60 mm outer diameter and 54 mm inner diameter. The DC motor was mounted on the main frame by using two pairs of MS angles and provision was made to slide the motor to get desired tension on the belt.

3.3.7 Conceptual model of maize dehusker cum sheller

The basic considerations for development of a maize dehusker cum sheller were taken into account and the conceptual model of maize dehusker cum sheller was developed using CATIA software. The dimensions of the major components were considered as per the design values, calculated earlier in this chapter. The principle of dehusking & shelling actions were shearing & tearing and friction by series of rubber type threshing element and a taper section with series of cuts which were given on a top cover. The conceptual model of maize dehusker cum sheller was shown in fig. 3.11.

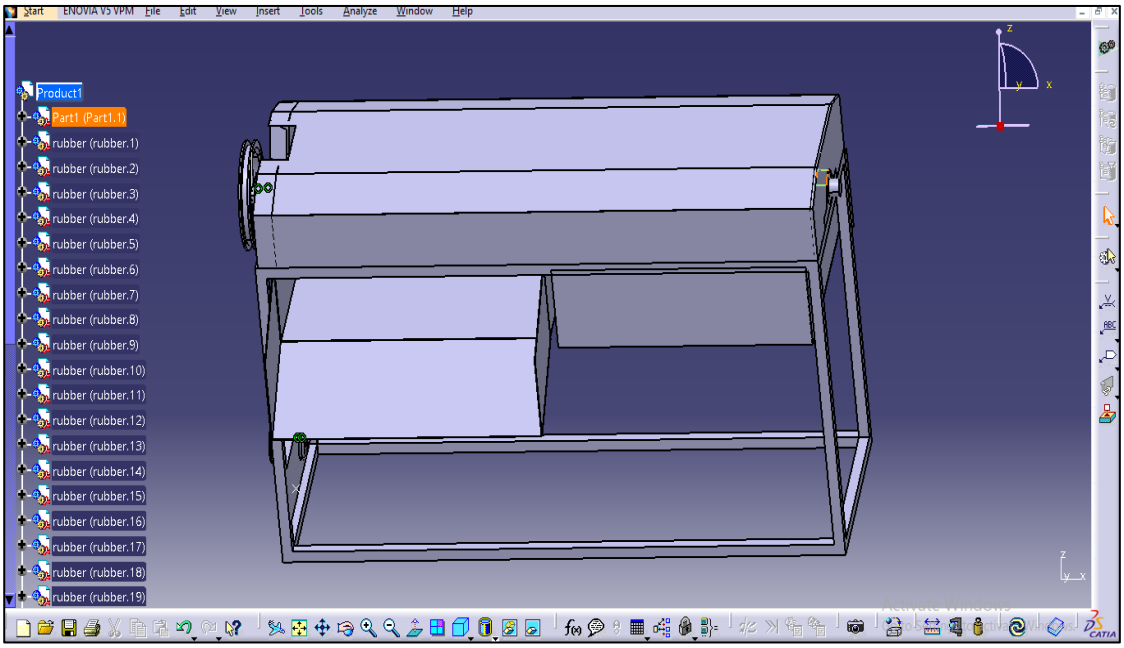

Fig 3.11 Isometric View of the conceptual model of thresher

3.3.8 Development of maize dehusker cum sheller

The prototype of maize dehusker cum sheller was fabricated based on dimensions obtained from the design in the department of FMPE, CAET Bhubaneswar. The prototype consists of a dehusking and shelling assembly, top cover, feeding chute, rubber assembly, power transmission system and shaft. The isometric view of the developed maize dehusker cum sheller is shown in the Fig.3.12. The detailed specifications of the prototype of a maize dehusker cum sheller is shown in Appendix B.

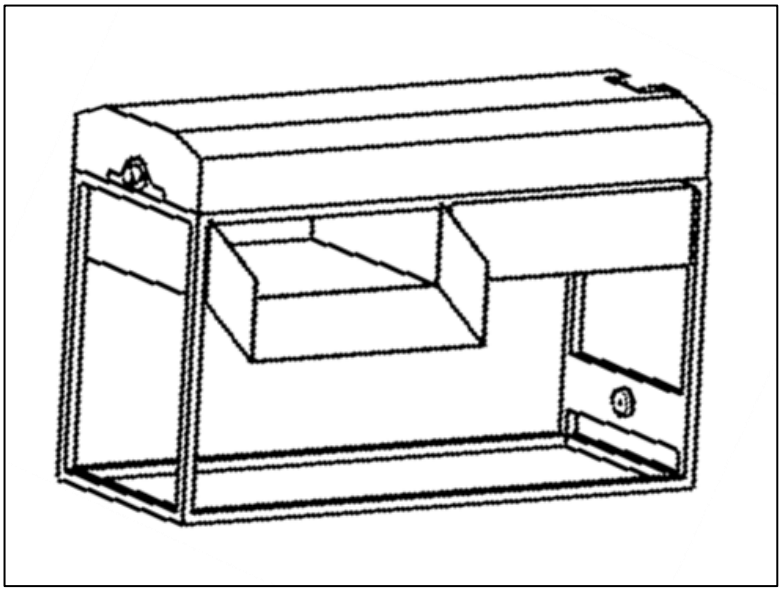

Fig 3.12 Isometric view of developed maize dehusker cum sheller

3.3.9 Experimental procedure

The maize dehusker cum sheller machine is fitted in rear side of mobile unit in a cabin. A 0.5 hp DC motor, powered by solar energy is fitted to the maize dehusker cum sheller. The two solar panels of 250W of each are mounted on the roof of machine which is connected to a 48V battery storage system. The solar radiations direct incident on the solar photovoltaic panel. Then the 12 V batteries of 4 in numbers drawing a power from the solar panels. The solar charge controller is provided in between the solar panel and battery setup for providing of constant power to the battery, it protects the batteries life. The DC motor takes a power from battery setup through a DC controller and accelerator. Then from motor, power is transmitted to the maize through dehusking and shelling shaft which is connected to belt and pulley arrangement.

When power is transmitted from motor pulley to the shaft pulley with the help of belt then middle hallow shaft is rotating along which pulley is mounted, and with the help of rotating shaft one side of solid shaft is rotating along with middle shaft due to the louvers of middle shaft, while another side of solid shaft does not rotates it gives a support to the cobs for dehusking purpose. Before starting the actual testing, belt tension, direction of rotation of pulley were checked. The moisture content of maize grain obtained with the help of oven drying method. The rotational speed of main shaft was also recorded using a non-contact type tachometer. The speed was adjusted at particular rpm using accelerator. Then maize cobs were fed one by one cob to avoid over feeding.

After the dehusking and shelling of total grains were collected from grain collecting tray then weight of whole grain, broken grains, unshelled grains, loose grain, clean grain, number of undehusked cobs were recorded (separately), and the time of operation to calculate output capacity, dehusking and shelling efficiency, and total losses were recorded. The procedure was repeated for all the combinations of treatments and data were recorded. The flow chart of energy is given in a following fig 3.13.

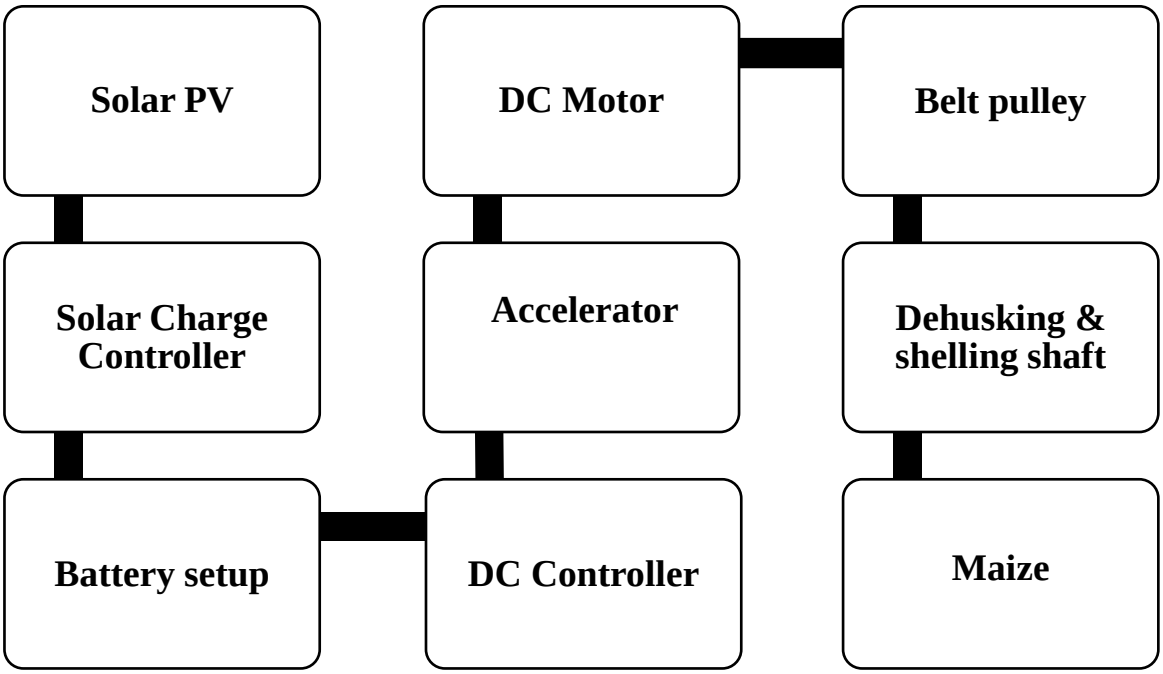

Fig 3.13 Energy flow of maize dehusker cum sheller

Fig 3.14 Rear view of top cover with dehusking & shelling arrangement

3.4 Performance evaluation of a mobile maize dehusker cum sheller

Performance evaluation of mobile maize dehusker cum sheller consist a performance evaluation of mobile unit and performance evaluation of maize dehusker cum sheller.

Fig 3.15 Mobile unit with maize dehusker cum sheller

3.4.1 Performance evaluation of mobile unit

The basic considerations for development of a mobile unit were taken into account and the conceptual model of the mobile unit was developed using CATIA software.

The performance evaluation of OMSPAM consist of a measurement of solar radiation (W/m^2), module back surface temperature (^{o} c), ambient temperature (^{o} c),

recording of time required for full charging by both electrical and solar energy, total distance travelled in full charged condition.

3.4.1.1 Irradiation meter

Solar survey multifunction 200R solar irradiation meter measure radiation, PV module temperature, ambient temperature, orientation or tilt angle of solar module. This instruments provided with suction mount temperature probe or sensor for measurement of PV module and ambient temperature and optional mounting bracket for optimum accuracy and ease of measurement.

Fig 3.16 Solar Irradiance meter

Fig 3.17 Measurement of solar radiations

3.4.2 Performance evaluation of maize dehusker cum sheller

The experiments at load condition were conducted at different levels of independent parameters viz., rotational speed, moisture content and feed rate. The details about independent parameters are given below.

In order to dehusking and shelling of maize cobs in the range of 20 to 90 kg/h, the required rotational speed ranges from 300 to 500 rpm (based on the literature available). So the present investigation from maize dehusker cum sheller for capacity of 20 to 60 kg/h, rotational speed of 415 to 510 rpm with 11.23 to 15.36 % moisture content was selected.

The performance evaluation of maize dehusker cum sheller was carried out one hour duration at specified rotational speeds, moisture content and feed rates. During the evaluation, a sample was collected from main grain outlet, cob and husk outlet for further analysis. The view of the evaluation setup of maize dehusker cum sheller is shown in fig 3.18.

The various performance evaluation parameters were calculated by observations made on each treatment. The dependent parameters on each treatment combinations were selected. The independent and dependent parameters on each treatment combinations were given below.

Independent variables	**Levels**	**Description**	**value**	**Dependent variables**
Rotational speed (S), rpm	4	S1	415	Dehusking efficiency, %
		S2	460	
		S3	510	Shelling efficiency,%
Feed rate (F) , kg/h	3	F1	20	
		F2	40	
		F3	60	Total losses, %
Moisture content (M) , %	3	M1	11.23	
		M2	13.07	Output capacity, kg/h
		M3	15.36	

Fig 3.18 Performance evaluation of mobile solar powered maize dehusker cum sheller

3.4.2.1 Total grain input per unit time

The total grain input per unit time were calculated by summing the weight of clean grain, broken grain and unthreshed grain from all outlets per unit time. This was calculated by following formula.

$$A = B + C + D \tag{3.32}$$

Where,

A = Total grain input per unit time, kg

B = weight of clean grain from all outlets per unit time, kg

C = weight of broken grain from all outlets per unit time, kg

D = weight of unthreshed grain from all outlets per unit time, kg

3.4.2.2 Dehusking efficiency

The dehusking efficiency was found by ratio of the number of dehusked cobs in test run to the total number of cobs used in test run.

$$\textbf{Dehusking efficiency} = \left(\mathbf{1} - \frac{\boldsymbol{G}}{\boldsymbol{H}}\right) \times \mathbf{100}\ \% \tag{3.33}$$

Where,

G = Number of un-dehusked cobs

H = Total number of cobs to be used

3.4.2.3 Shelling efficiency

The shelling efficiency is was found by the ratio of threshed grains collected in all the outlets per unit time to the total grain input per unit time.(IS: 6284-1985,1986). This was calculated by using the following formula.

$$\text{Shelling efficiency} = (100 - \%\ \text{unthreshed grain}),\ \% \tag{3.34}$$

Where,

$$\%\ \textbf{Unthreshed grain} = \left(\frac{\mathbf{H}}{\mathbf{A}}\right) \times \mathbf{100}, \tag{3.35}$$

Where,

H = weight of unthreshed grain per unit time obtained from all outlets, kg

3.4.2.4 Total losses

Total losses (T) were the sum of the percentage of broken grain, percent of unthreshed grains. This was expressed in terms of percentage.

$$T, \% = \text{Broken grain}, \% + \text{Unthreshed grain}, \% \quad (3.36)$$

The broken grain percentage is the ratio of the quantity of broken grain from all outlets per unit time to the total grain input per unit time. (IS: 6284-1985, 1986)

$$\text{Broken grain} = \left(\frac{E}{A}\right) \times 100, \% \quad (3.37)$$

Where,

E = quantity of broken grain from all outlets per unit time, kg

A = total grain input per unit time, kg

3.4.2.5 Output capacity

The output capacity was determined by weighing the total grain (whole and damaged) received per hour at main grain output of the thresher (IS: 6284 – 1985, 1986).

$$\text{Output capacity (kg/h)} = \frac{\text{Weight of grain threshed,kg}}{\text{tame taken,h}} \quad (3.38)$$

3.5 Cost economics of mobile maize dehusker cum sheller

The methodology consisting of total production cost, cost of operation. The total production cost (initial cost) obtained by adding cost of raw material and cost of fabrication process. The cost of operation is obtained by following methodology.

3.5.1 Cost of operation

The cost of operation of mobile maize dehusker cum sheller includes the fixed cost and the variable cost. The fixed cost generally consist of depreciation, interest on investment, insurance, taxes and housing. The operating cost consist of cost of repairs and maintenance and labour wages (Ojha and Michael, 2009). The detailed calculations of operating cost of dehusker cum sheller are given in Appendix C

$$\text{Total processing or operation cost} = \text{Fixed cost} + \text{Operating cost} \quad (3.39)$$

Fig 3.19 Components of OMSPAM (mobile unit)

CHAPTER IV

RESULTS AND DISCUSSION

In this chapter, the results concerning to physical properties of maize, performance evaluation of developed mobile maize dehusker cum sheller were presented and analyzed. The cost economics of developed mobile maize dehusker cum sheller were also presented in this chapter. The results are presented under the following headings.

4.1 Physical properties of maize
4.2 Performance evaluation of a mobile maize dehusker cum sheller
4.3 Economics of developed mobile maize dehusker cum sheller

4.1 Physical properties of maize

In this research, the different physical properties of maize grains and cobs were studied and it was considered in the design of main components of maize dehusker cum sheller. The various physical properties of maize were determined using the standard procedures as explained in section 3.1 of chapter 3. The all physical properties of maize grains were evaluated at a moisture content in the range of 16 to 18.5% (w. b.) for OMH 14-27(Odisha Maize Hybrid) variety. The average value of different physical properties of the maize for one varieties were presented in Table 4.1. The replication values of physical properties were presented in Appendix A-1.

The measured length of un-dehusked cob was minimum (142.64 mm) and maximum (269.03 mm) in OMH 14-27 variety. The measured mean length of cobs were found to be 214.19 mm with deviation of 31.81 mm and coefficient of variance is 0.15. The diameter of un-dehusked maize cob was maximum (55.21 mm) and minimum (40.23 mm) in case of OMH 14-27 variety. The measured mean diameter of cobs were found to be 45.29 mm with deviation of 3.29 mm and coefficient of variance is 0.07. The weight of un-dehusked cob was found minimum (100.00 g) and maximum (271.47 g) in case of OMH 14-27 variety. The measured mean weight of cobs were found to be 184.02 mm with deviation of 42.06 mm and coefficient of variance is 0.23

The mean linear dimensions involved length, breadth and thickness of maize grains. The maximum ear length (11.98 mm), breadth (9.87 mm), thickness (6.50 mm) and minimum length (6.40), breadth (5.50), thickness (4.10) in OMH 14-27 variety. The measured mean length was found to be 9.79 mm with deviation of 1.07 mm and coefficient of variation is 0.11. The measured mean breadth was found to be 8.23 mm with deviation of 0.91 mm and coefficient of variation is 0.91. The measured mean thickness was found to be 5.51 mm with deviation of 0.50 mm and coefficient of variation is 0.09.

The arithmetic mean diameter of the maize grains were found to be in the range of 5.97 to 8.94 mm with a mean value of 7.84 mm. The geometric mean diameter of the maize grains were found to be in the range of 5.96 to 8.61 mm with a mean value of 7.60 mm. The sphericity of the maize grains were found to be in the range of 0.67 to 0.99 with a mean value of 0.78. The surface area of the maize grains were found to be in the range of 111.42 to 232.79 mm^2 with a mean value of 182.17 mm^2.

The measured mean bulk density was found to be 0.75 g/cm^3 with deviation of 0.02 g/cm^3 and coefficient of variations is 0.03. The measured mean true density was found to be 1.32 g/cm^3 with deviation of 0.008 g/cm^3 and coefficient of variations is 0.006. The measured mean porosity was found to be 43.09% with deviation of 0.017% and coefficient of variations is 0.041.

The arithmetic mean diameter and geometric mean diameter of 100 no's of observation of a OMH 14-27 variety of maize grains were found be 7.84 mm and 7.60 mm, respectively. Similarly average value of sphericity and surface area of maize grains were 0.78 and 182.16 mm^2. The findings are in similar with Jayan and Kumar (2004), Tarighi *et al.* (2011), Chilur *et al.* (2016).

The mean bulk and true densities for 5 no's of observation of maize grains were 0.75 g/cm^3, and 1.138 g/cm^3. The similar findings were reported by Jayan and Kumar (2004), Tarighi *et al.* (2011), Chilur *et al.* (2016). The mean porosity of the 5 no's of observation of maize grains of one varieties was 43.09 %. The result were agreement with Tarighi *et al.* (2011).

Table 4.1 Physical properties of maize variety selected for the study

Properties		OMH 14-27 (Odisha Maize Hybrid)	Standard Deviation	Coefficient of Variation
Length of un-dehusked cob, mm		214.19	31.813	0.148
Dimeter of un-dehusked cob, mm		45.29	3.294	0.072
Weight of un-dehusked cob, g		184.02	42.068	0.228
Linear dimension of maize grains, mm	Length(l)	9.79	1.069	0.109
	Breadth(b)	8.23	0.912	0.110
	Thickness(t)	5.50	0.498	0.090
Arithmetic mean diameter, mm		7.84	0.526	0.067
Geometric mean diameter, mm		7.60	0.476	0.062
Sphericity		0.78	0.063	0.081
Surface area, mm^2		182.167	22.201	0.121
Bulk Density, g/cm^3		0.75	0.023	0.031
True density, g/cm^3		1.318	0.008	0.006
Porosity, %		43.09	1.77	0.041

4.2 Performance evaluation of mobile maize dehusker cum sheller

It consist of performance evaluation of mobile unit and performance evaluation of maize dehusker cum sheller.

4.2.1 Performance evaluation of mobile unit

The various tests for the performance evaluation of the OMSPAM vehicle were conducted. The different tests performed were as follows:-

a) Measurement of solar radiations
b) Time for full charging by both electrical and solar energy
c) Total distance travelled in full charged condition

4.2.1.1 Measurement of solar radiations

The solar radiations and panel temperatures were measured by using an instrument as mentioned in section 3.4.1.1. The orientation of solar panel, incident solar radiations effect on the time required for full charging of battery system. From changing the orientation of solar panel and by measuring of solar radiations incident on a solar photovoltaic panels concluded that when front wheel of OMSPAM vehicle remains towards the sun position then both the solar panels were getting the maximum and nearly same radiations. Average values of measured solar radiations, module temperature, and ambient temperature were given in following Table 4.2. Solar radiations are found to be maximum at 12 noon. The solar radiations were increasing from morning 9 A.M. to upto 12 noon and after that radiations are decreasing.

Table 4.2 Measurement of solar radiations

Time, h	Average values					
	Module temperature, ^{o}c		Ambient temperature, ^{o}c		Solar irradiations , w/m^2	
	Left side (English side) solar panel	Right side (Odia side) solar panel	Left side (English side) solar panel	Right side (Odia side) solar panel	Left side (English side) solar panel	Right side (Odia side) solar panel
9	38	37	35	34	506	478
10	40	39	37	36	658	612
11	42	41	39	38	745	697
12	44	43	40	39	871	852
13	45	44	39	38	820	763
14	43	42	37	36	639	611
15	41	40	36	35	543	495
16	39	39	35	34	437	390

4.2.1.2 Recording of time for full charging of battery system

Generally it takes 7 to 8 hours for full charging of battery. The full charge battery holds for 5-6 hours in working condition. The vehicle travels at a speed of 35 km/h (25 km/h fully laden). The range of distance travelled is 120-130 km with solar panel (on sunny day).The vehicle will only operate if the voltage is min 48 V as each battery rating is 12 V.

4.2.2 Performance evaluation of maize dehusker cum sheller

Prior to the actual performance evaluation of maize dehusker cum sheller, pre-test observations were recorded. The pre-test observations such as moisture content were found to be in the range of 11.23 % to 15.36 %. At no-load condition visual observations were presented. During one hour prototype run under no load conditions, no breakdown or loosening of parts were observed. The observations of machine during the operation were made on slippage of belts, presence of undue knocking or ratting sound, slackness of any components and presence of any oscillation. The machine performance parameters with respect to feed rate, moisture content and rotational speed were given in Appendix A-2 .The results pertaining to the effect of operational parameters viz., rotational speed, moisture content and feed rate on the performance parameters of the maize dehusker cum sheller were presented below.

4.2.2.1 Dehusking efficiency

The dehusking efficiency was determined by using the methodology as explained in section of 3.4.2.2. The effect of feed rate, rotational speed and moisture content on dehusking efficiency of maize dehusker cum sheller is presented in Table 4.3.

It was observed that the mean dehusking efficiency with respect to F1, F2 and F3 feed rate were 97.95%, 96.91% and 96.24%, respectively. Among all the different treatments, the dehusking efficiency was maximum (98.79%) with respect to F1M1S3 treatment combination whereas it was minimum (95.53 %) in F3M3S1 treatment.

Table 4.3 Range and marginal mean of dehusking efficiency at different levels of variables

Level of variables	Dehusking efficiency (%)	
	Range	**Marginal mean**
Moisture content (M), %		
M1 = 11.23	96.15-98.79	97.47
M2 = 13.07	95.86-98.37	97.12
M3 = 15.36	95.53-98.02	96.78
Feed rate (F), kg/h		
F1= 20	97.11-98.79	97.95
F2 = 40	96.10-97.86	96.98
F3 = 60	95.53-96.94	96.24
Rotational speed (S), rpm		
S1 = 415	95.53-97.84	96.69
S2 = 460	96.57-98.27	97.42
S3 = 510	96.31-98.79	97.55

The effect of rotational speed and moisture content on the dehusking efficiency at 20 kg/h is shown in the Fig. 4.1. From Table 4.3, it was clear that the dehusking efficiency for 20 kg/h feed rate ranged from 97.11 % to 98.79 % for various moisture content. The trend shows that dehusking efficiency increased with the increase in rotational speed for all the moisture content tested. Further, the maximum dehusking efficiency obtained at 11.23 % moisture content for all the rotational speeds, while it was minimum for 15.36 % moisture content.

The dehusking efficiency variation with the shaft rotational speed and moisture content at 40 kg/h is shown in the Fig. 4.2. It was observed that, as the shaft rotational speed increased from 415 rpm to 510 rpm the dehusking efficiency increased for all the moisture content studied. From table 4.3, it was clear that the dehusking efficiency for 40 kg/h feed rate ranged from 96.10 % to 97.86 % for various moisture content. The dehusking efficiency is reduces with increasing of feed rate for all the moisture content & speed.

The dehusking efficiency at 60 kg/h in relation to different levels of the shaft rotational speeds and moisture content are shown in the Fig. 4.3. The dehusking efficiency increased with the decrease in moisture content for all the rotational speed. From Table 4.3, it was clear that the dehusking efficiency for 60 kg/h feed rate ranged from 95.93 % to 96.94 % for various moisture content and rotational speed.

After the observation of Table 4.3, it was found that dehusking efficiency have some variations, it varied from 95.93% to 98.79 for all tested treatment combinations. When feed rate increased it resulted in decreased dehusking efficiency of maize dehusker cum sheller as shown in the Fig. 4.1, Fig. 4.2 and Fig. 4.3. The reduction in the efficiency may be due to the fact that less amount of maize cobs husk tearing and rubbing off inside in between the rubber and rotating shaft, with increased feed rate for particular rotational speed and moisture content. Among all the feed rates, the maximum dehusking efficiency was observed for a feed rate of 20 kg/h. The mean dehusking efficiency of F1 feed rate was maximum and significantly higher than F3 feed rate whereas it was on par with the F2 feed rate at 0.97%. The results showed that F1 and F2 feed rates achieved the more dehusking efficiency in the maize dehusker cum sheller.

The increased rotational speeds lead to increase in the dehusking efficiency. This is because of increased removing of the husk from cob with the increase in shearing and tearing force created in between the rotating shaft and nitrile rubber with increased rotational speed at all the feed rates and moisture content. The similar findings were reported by Singh, 2010 and Chilur 2017.

The increased moisture content lead to decrease in the dehusking efficiency. The reduction in the efficiency may be due to the fact that less amount of maize cob husk tearing and rubbing off in between the rubber and rotating shaft with increased amount of moisture content of husk. The maximum dehusking efficiency was observed for the 20 kg/h, 510 rpm and 11.23% moisture content while it was minimum for 60 kg/h, 415 rpm, and 15.36 % of moisture content. The analysis of variance of dehusking efficiency were shown in table 4.4

Table 4.4 Analysis of variance of dehusking efficiency

Source of Variation	DF	Sum of Squares	Mean Squares	F-Calculated	P value
Factor A	2	39.353	19.677	51.802	0.000
Factor B	2	7.203	3.601	9.481	0.000
Int A X B	4	12.144	3.036	7.990	0.001
Factor C	2	10.265	5.133	13.513	0.000
Int A X C	4	12.217	3.054	8.038	0.000
Int B X C	4	5.972	1.493	3.931	0.024
Int A X B X C	8	15.128	1.891	4.978	0.000
Error	54	20.534	0.380		
Total	80	122.816			

The factor A, B and C represents feed rate, moisture content, and rotational speed respectively. From the table it can be clearly seen that, the main effect of factors A, B & C on dehusking efficiency were significantly different at both 1 per cent and 5 per cent level of significance. All the interactions of A were significantly different at both 1 per cent and 5 per cent level of significance. The interaction of B and C were statistically significant at only 5 per cent level of significance. While considering the multiple interactions (ABC) of the data were significantly different at both 1 per cent and 5 per cent level of significance.

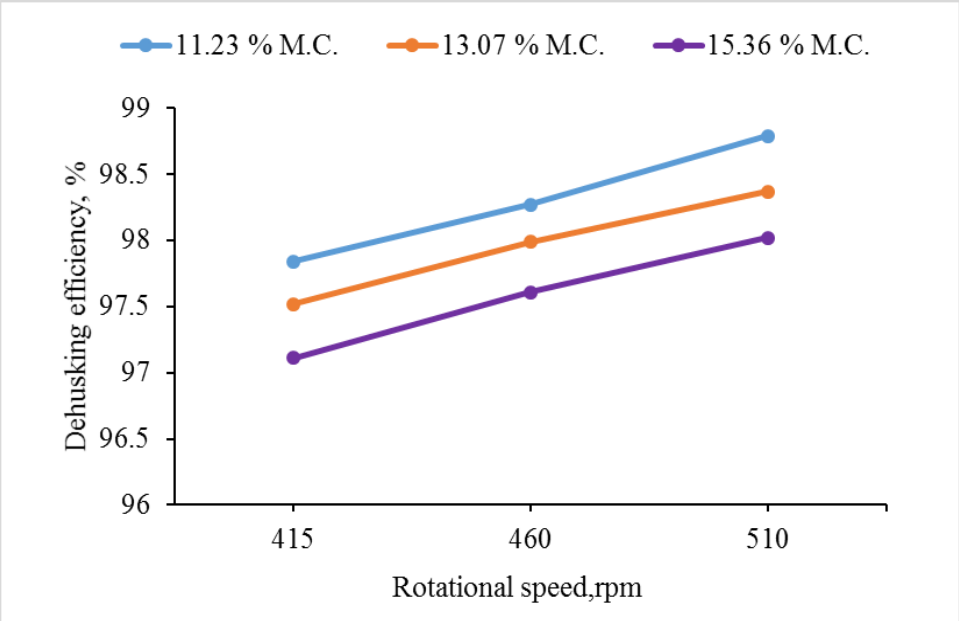

Fig. 4.1 Effect of rotational speed and moisture content on dehusking efficiency at feed rate of 20 kg/h

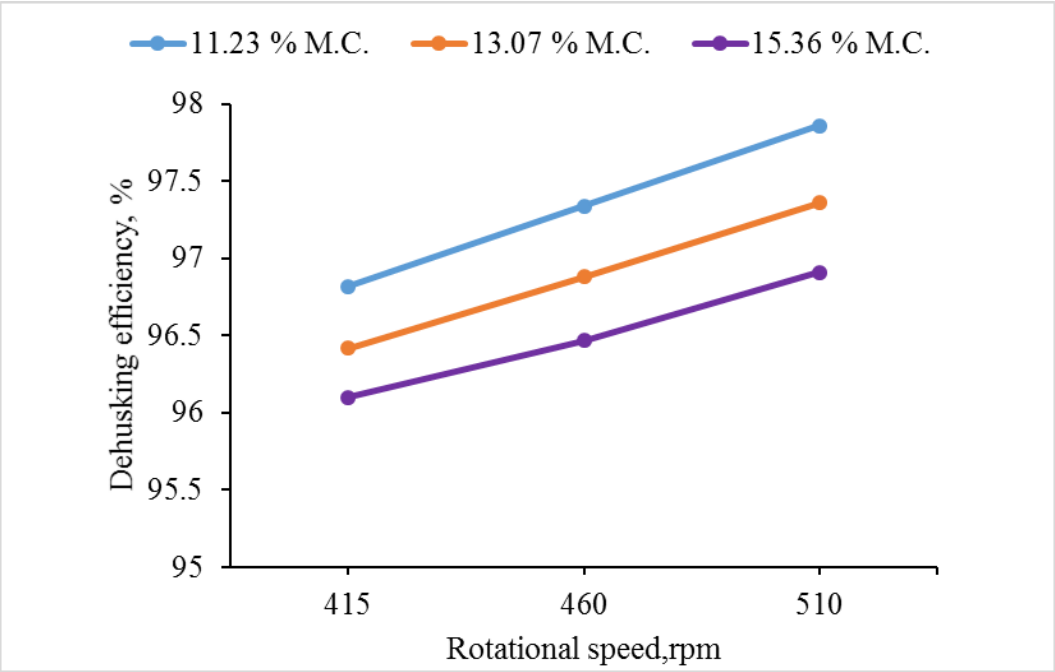

Fig. 4.2 Effect of rotational speed and moisture content on dehusking efficiency at feed rate of 40 kg/h

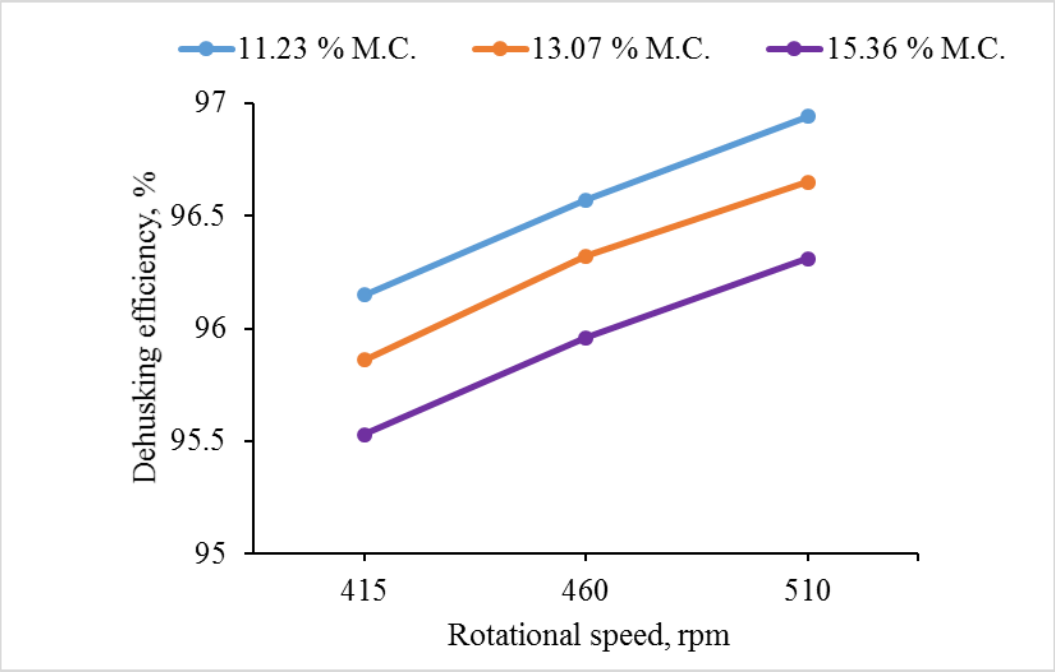

Fig. 4.3 Effect of rotational speed and moisture content on dehusking efficiency at feed rate of 60 kg/h

4.2.2.2 Shelling efficiency

The shelling efficiency was determined by using the methodology as explained in section of 3.4.2.3. Range and marginal mean of shelling efficiency at different levels of variables were given in table 4.5.The effect of different rotational speed, moisture content and feed rate were presented in table and it was observed that the highest shelling efficiency of (96.84%) was obtained for F1M1S3 treatment combination where as it was lowest (93.31%) for F3M3S1 treatment combination. The mean shelling efficiency with respect to F1, F2 and F3 feed rate were 95.86, 96.03 and 94.18 %, respectively. At the feed rate of 20 kg/h, the shelling efficiency was in the range of 94.75 to 96.84 % where it was 95.14 to 96.71% and 93.31 to 95.07% for 40 and 60 kg/h feed rate respectively.

Table 4.5 Range and marginal mean of shelling efficiency at different levels of variables

Level of variables	Shelling efficiency (%)	
	Range	Marginal mean
Moisture content (M), %		
M1 = 11.23	94.21-96.84	95.53
M2 = 13.07	93.75-96.38	95.06
M3 = 15.36	93.31-95.92	94.62
Feed rate (F), kg/h		
F1= 20	94.75-96.84	95.80
F2 = 40	95.14-96.71	95.93
F3 = 60	93.31-95.07	94.19
Rotational speed (S), rpm		
S1 = 415	93.31-94.21	93.76
S2 = 460	93.73-96.43	95.08
S3 = 510	94.21-96.84	95.53

The shelling efficiency relation with respect to the rotational speed and moisture content for 20 kg/h feed rate is shown in the Fig. 4.4. The shelling efficiency, for all the moisture content, increased with the increase in rotational speeds. The shelling efficiency increased from rotational speed of 415 to 510 rpm in all the moisture content.

The effect of rotational speed and moisture content on shelling efficiency at feed rate of 40 kg/h is shown in the Fig. 4.5. The shelling efficiency increased with increase in the speed, and decreased with increase in moisture content. The shelling efficiency was slightly increasing as the rotational speed increased from 415 rpm to 510 rpm. The mean of shelling efficiency was higher at F2 feed rate than the F1 and F3 feed rate.

The variations in shelling efficiency at different rotational speed and moisture content for 60 kg/h feed rate are shown in the Fig. 4.6. The moisture content of 15.36 % resulted in a minimum shelling efficiency at all the rotational speed while it was maximum at 11.23 % moisture content The maximum shelling efficiency was observed for the 20 kg/h, 510 rpm and 11.23% moisture content while it was minimum for 60 kg/h, 415 rpm, and 15.36 % moisture content.

When feed rate increased it resulted in decreased shelling efficiency of maize dehusker cum sheller as shown in the Fig. 4.4, Fig. 4.5 and Fig. 4.6. This may be due to less energy spent per cob in terms of less friction taken place on cobs for same length of shaft of sheller. While the “cushioning” effect at higher feed rates also caused to decrease in shelling efficiency of sheller (Sandhar and Panwar, 1975; Vas and Harrison, 1969). Among the different feed rates, the mean shelling efficiency was maximum at F2 and was significantly higher over F3 feed rates at 1.85%. The similar results were reported by Chilur and Sushilendra 2017.

Further, the increased rotational speed resulted in the increased shelling efficiency. This may be due to the increased detachment of the grains from cob with higher friction created between the rotating shaft with cobs and taper arrangement provided inside the top cover for shelling purpose, as the rotational speed increases. The result showed that S2 and S3 rotational speeds resulted in higher shelling efficiency of the maize dehusker cum sheller (Fig. 4.4, Fig. 4.5 and Fig. 4.6).

As for the increasing the grain moisture content leads to decreasing of the shelling efficiency. This is due to the increase in moisture content of grain also leads to obstruct the shelling process due to reducing of dry matter of grains so percentage of unshelled grains are increases hence decreasing of shelling efficiency. This is consistent with Wanjala (2014).

The analysis of variance of shelling efficiency was given in table 4.6. The factor A, B and C represents feed rate, moisture content, and rotational speed respectively. From the table it can be clearly seen that, the main effect of factors A, B & C on shelling efficiency were significantly different at both 1 per cent and 5 per cent level of significance. All the interactions of A and B were significantly different at both 1 per cent and 5 per cent level of significance. While considering the multiple interactions (ABC) of the data were significantly different at both 1 per cent and 5 per cent level of significance.

Table 4.6 Analysis of variance of shelling efficiency

Source of Variation	DF	Sum of Squares	Mean Squares	F-Calculated	P value
Factor A	2	56.534	28.267	162.477	0.000
Factor B	2	10.442	5.221	30.008	0.000
Int A X B	4	13.428	3.357	19.296	0.000
Factor C	2	11.714	5.857	33.667	0.000
Int A X C	4	17.292	4.323	24.845	0.000
Int B X C	4	18.512	4.628	26.598	0.000
Int A X B X C	8	21.208	2.651	15.236	0.000
Error	54	9.411	0.174		
Total	80	158.541			

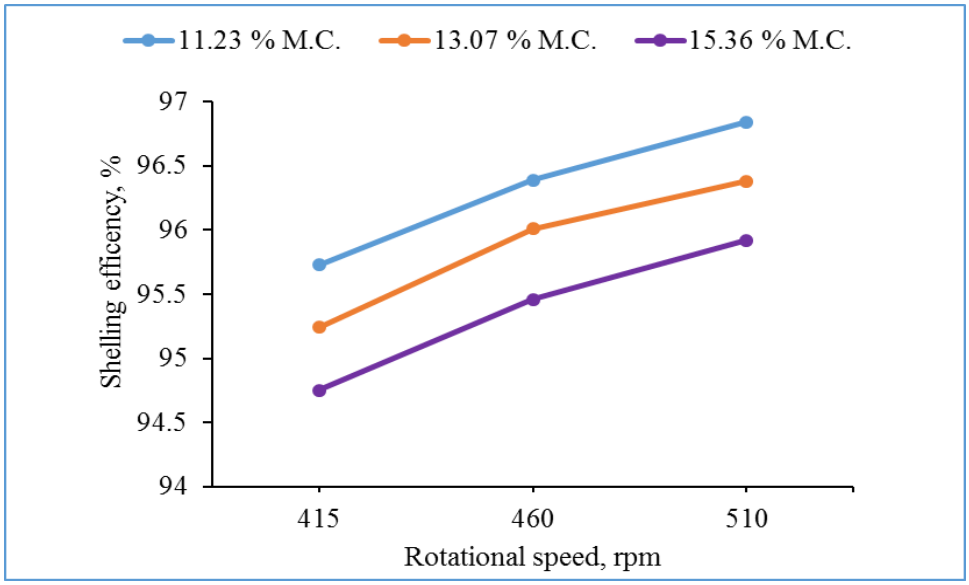

Fig. 4.4 Effect of rotational speed and moisture content on shelling efficiency at feed rate of 20 kg/h

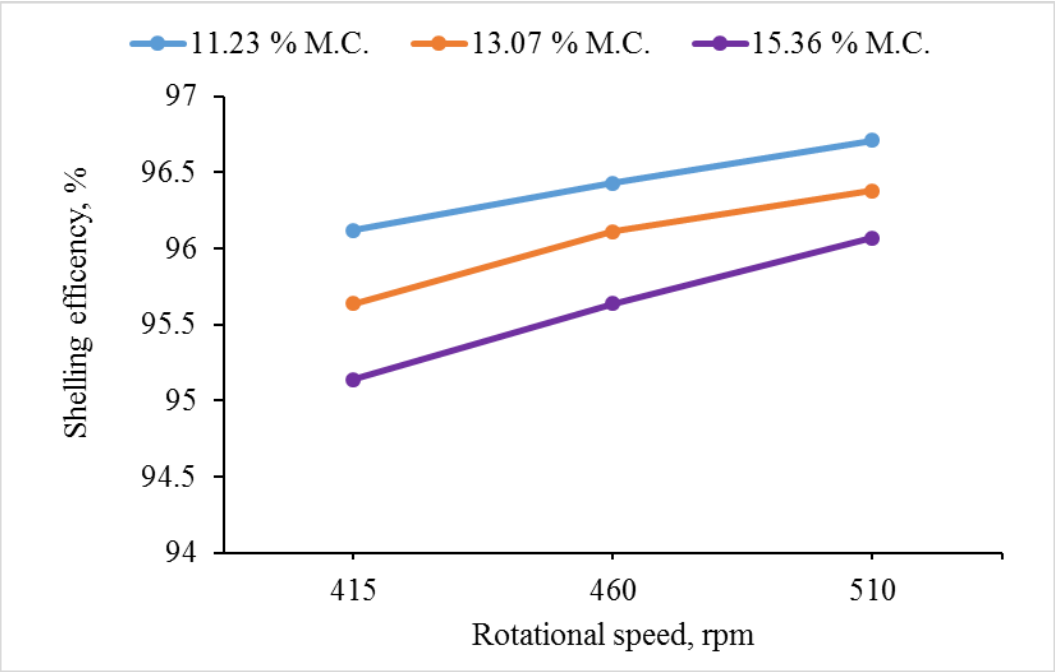

Fig. 4.5 Effect of rotational speed and moisture content on shelling efficiency at feed rate of 40 kg/h

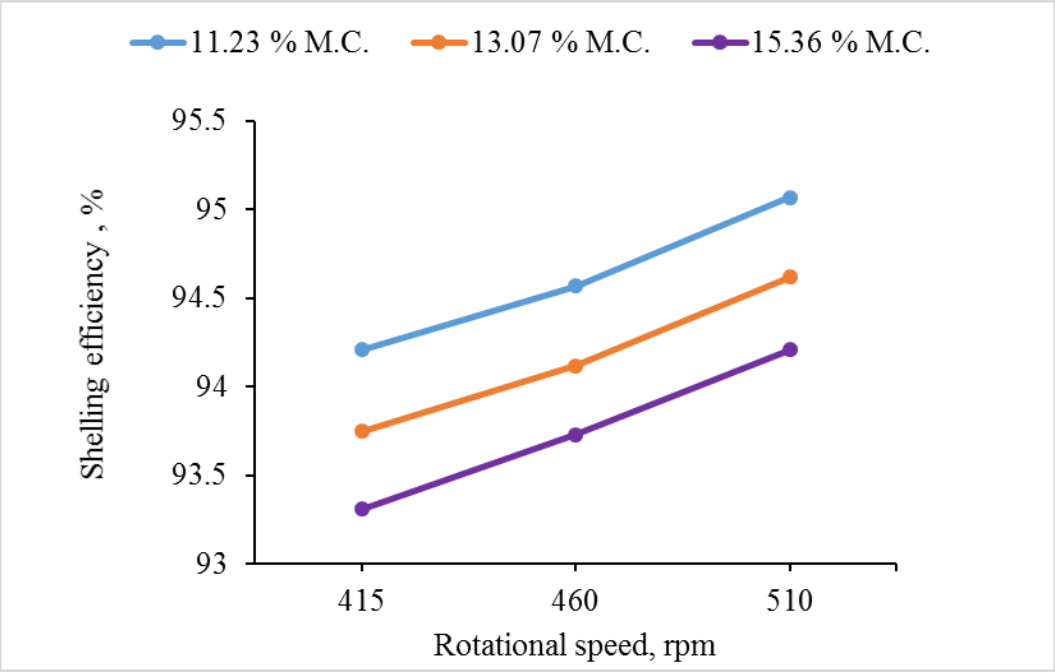

Fig. 4.6 Effect of rotational speed and moisture content on shelling efficiency at feed rate of 60 kg/h

4.2.2.3 Total losses

The total losses were determined by using the methodology as explained in section of 3.4.2.4. The total losses consist of percentage of broken grain and percentage of unthreshed grain. Range and marginal mean of total losses at different levels of variables were given Table 4.7. The influence of rotational speed, moisture content and feed rate factors on total losses in maize dehusker cum sheller is presented in table. Among all the different treatments, the total losses was maximum of (7.08 %) in F3M3S1 treatment combination and lowest total losses of 4.31% was recorded in F2M1S3 treatment combination. The mean total losses with respect to F1, F2 and F3 feed rate were found to be 5.55%, 5.01% and 6.35%, respectively. At the feed rate of 20 kg/h, the total losses were in the range of 4.87 to 6.21 % where it was 4.31 to 5.70 % and 5.52 to 7.08 % for 40 and 60 kg/h feed rate respectively.

Table 4.7 Range and marginal mean of total losses at different levels of variables

Level of variables	Total losses (%)	
	Range	Marginal mean
Moisture content (M), %		
M1 = 11.23	4.31-6.51	5.41
M2 = 13.07	4.62-6.76	5.69
M3 = 15.36	4.91-7.08	6.00
Feed rate (F), kg/h		
F1= 20	4.87-6.21	5.54
F2 = 40	4.31-5.70	5.01
F3 = 60	5.52-7.08	6.30
Rotational speed (S), rpm		
S1 = 415	5.12-7.08	6.10
S2 = 460	4.69-6.76	5.74
S3 = 510	4.31-6.21	5.26

The total losses in relation with respect to rotational speed and moisture content for 20 kg/h feed rate is shown in the Fig. 4.7. The total losses, for all the moisture content, increased with the increase in moisture content. The total losses decreased from rotational speed of 415 to 510 rpm in all the moisture content.

The effect of rotational speed and moisture content on total losses at feed rate of 40 kg/h is shown in the Fig. 4.8. The total losses increased with increase in the moisture content, and decreased with increase in rotational speed. The total losses were slightly decreasing as the rotational speed increased from 415 rpm to 510 rpm. The mean of total losses were lower at F2 feed rate than the F1 and F3 feed rate.

The variations in total losses at different rotational speed and moisture content for 60 kg/h feed rate are shown in the Fig. 4.9. The moisture content of 11.23 % resulted in a minimum total losses at all the rotational speed while it was maximum at 15.36 % moisture content. The minimum total losses were observed for the 40 kg/h, 510 rpm and 11.23% moisture content while it was minimum for 60 kg/h, 415 rpm, and 15.36 % moisture content.

When feed rate was increased it resulted in increasing total losses of maize dehusker cum sheller as shown in the Fig. 4.7, Fig. 4.8 and Fig. 4.9. This may be due to less energy spent per cob in terms of less friction taken place on cobs for same length shaft of sheller so the total losses were increased with increasing of percentage of unthreshed grains. The broken grains were reduced as increasing of feed rate but the percentage of broken grains is much less than the percentage of unthreshed grain so the total losses were increasing. Among the different feed rates, the mean total losses were maximum at F3 and was significantly higher over F1 feed rates at 0.80%. The similar results were reported by Chilur and Sushilendra 2017.

Further, the increased rotational speed resulted in the reduction of total losses. The minimum percentage of total losses were found to be at 510 rpm of rotational speed. The percentage of unthreshed grains were decreased due to the increased detachment of the grains from cob with higher friction created between the rotating shaft and taper arrangement provided inside the top cover for shelling purpose, as the rotational speed increases. The percentage of grain breakage were increasing with increasing of rotational speed but it is not more than the percentage of unthreshed grain so the total losses were reduced. The result showed that S2 and S3 rotational speeds resulted in lower total losses of the maize dehusker cum sheller (Fig. 4.4, Fig. 4.5 and Fig. 4.6).

As for the increasing the grain moisture content leads to increasing of the total losses. This is due to the increase in moisture content of grain also leads to obstruct the shelling process due to reducing of dry matter of grains so percentage of unshelled grains were increases hence increasing of total losses. As increasing of moisture content percentage of broken grains were reduced but it in negligible amount. The minimum total losses were found to be at 11.23 % of moisture content, 40 kg/h of feed rate and 510 rpm of rotational speed.

The analysis of variance of total losses were given in Table 4.8 The factor A, B and C represents feed rate, moisture content, and rotational speed respectively. From the table it can be clearly seen that, the main effect of factors A, B & C on total losses were significantly different at both 1 per cent and 5 per cent level of significance. All the interactions of A and B were significantly different at both 1 per cent and 5 per cent level of significance. While considering the multiple interactions (ABC) of the data were significantly different at both 1 per cent and 5 per cent level of significance.

Table 4.8 Analysis of variance of total losses

Source of Variation	DF	Sum of Squares	Mean Squares	F-Calculated	P value
Factor A	2	23.406	11.703	69.303	0.000
Factor B	2	4.982	2.491	14.751	0.000
Int A X B	4	7.212	1.803	10.668	0.000
Factor C	2	9.062	4.531	26.835	0.000
Int A X C	4	8.268	2.067	12.236	0.000
Int B X C	4	11.32	2.830	16.749	0.000
Int A X B X C	8	16.208	2.026	11.986	0.000
Error	54	9.143	0.169		
Total	80	89.601			

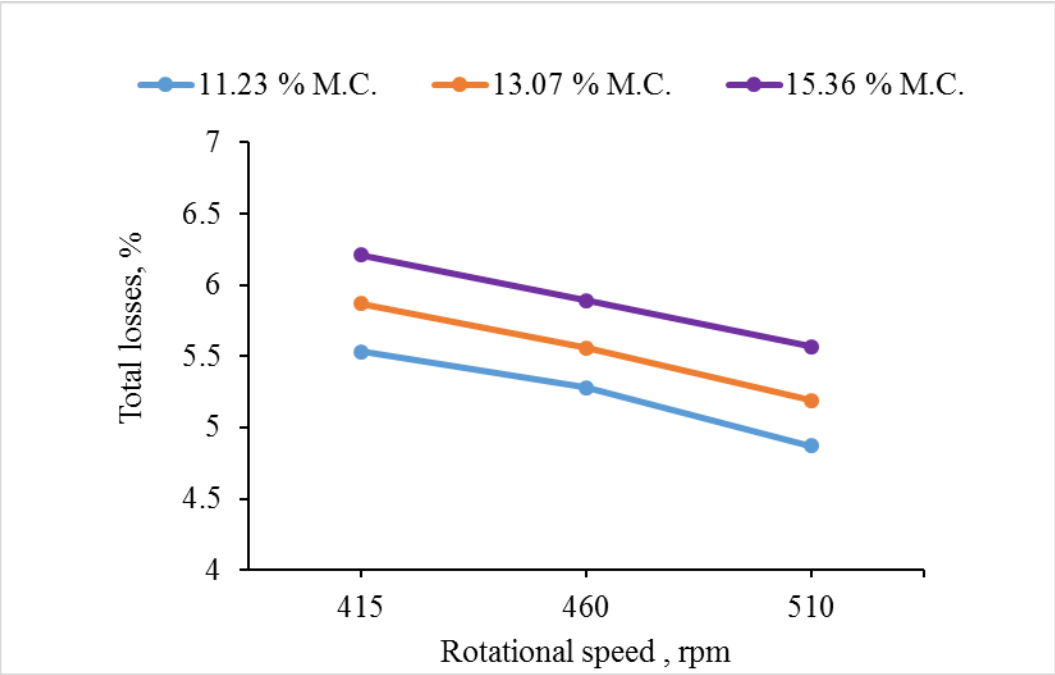

Fig. 4.7 Effect of rotational speed and moisture content on total losses at feed rate of 20 kg/h

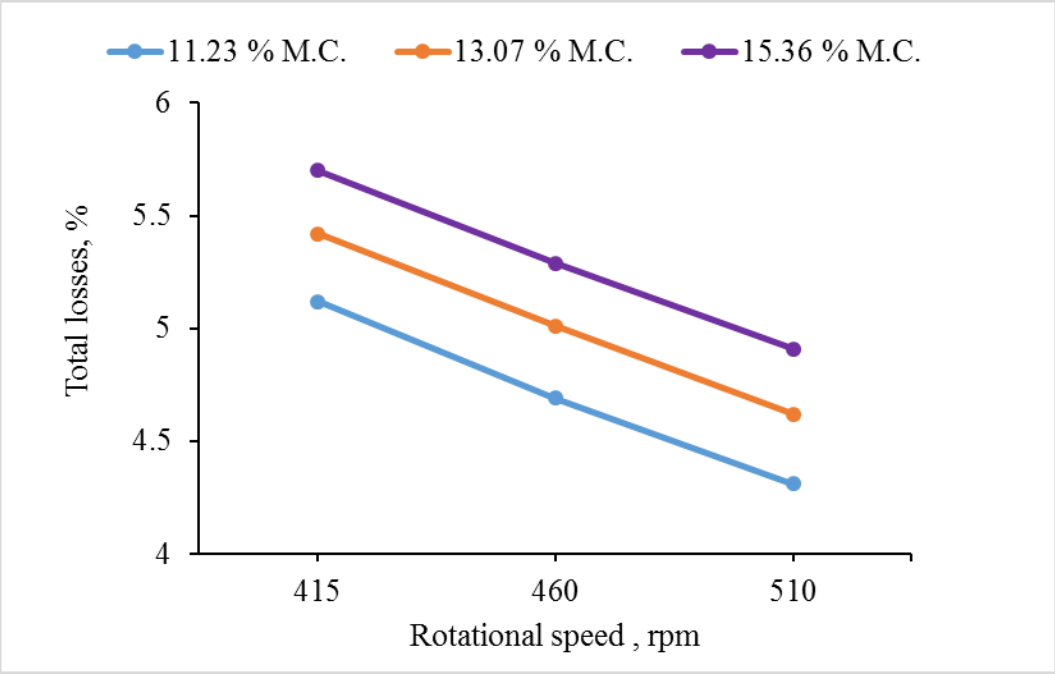

Fig. 4.8 Effect of rotational speed and moisture content on total losses at feed rate of 40 kg/h

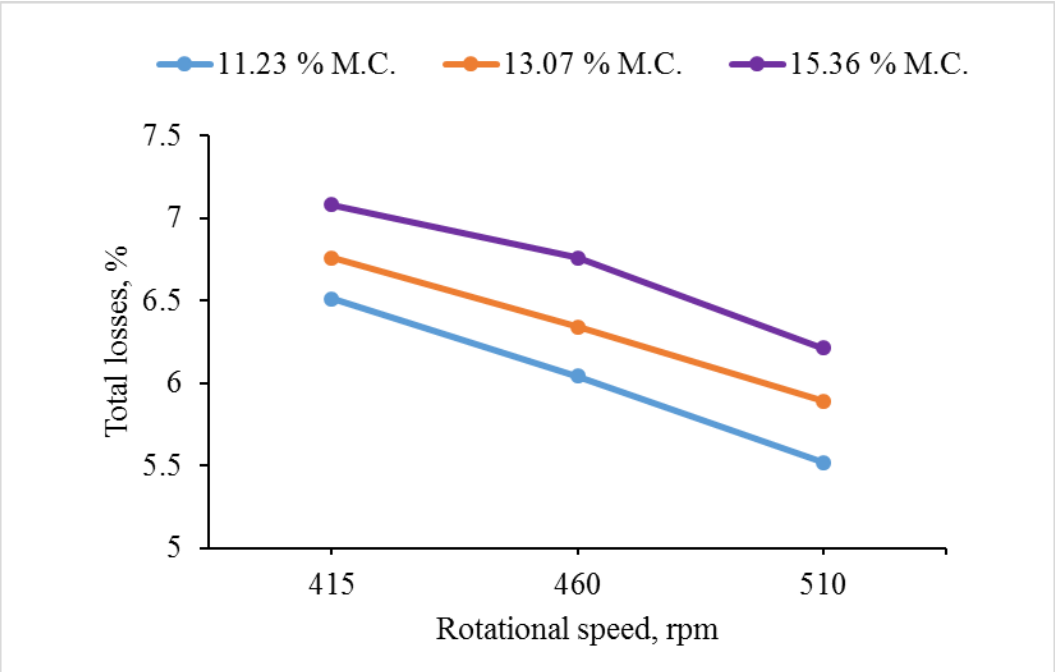

Fig. 4.9 Effect of rotational speed and moisture content on total losses at feed rate of 60 kg/h

4.2.2.4 Output capacity

The output capacity during dehusking and shelling operation was calculated by using the equation 3.38 and observations were shown in the Table 4.9.

Table 4.9 Range and marginal mean of output capacity at different levels of variables

Level of variables	Output capacity (kg/h)	
	Range	Marginal mean
Moisture content (M), %		
M1 = 11.23	11.08-36.14	23.11
M2 = 13.07	10.62-35.79	23.20
M3 = 15.36	10.07-35.38	22.73
Feed rate (F), kg/h		
F1= 20	10.07-12.21	11.14
F2 = 40	21.82-24.06	22.94
F3 = 60	33.91-36.14	35.03
Rotational speed (S), rpm		
S1 = 415	10.07-34.98	22.53
S2 = 460	10.71-35.79	23.25
S3 = 510	11.41-36.14	23.77

From the above table, it was found that mean output capacity at F1, F2 and F3 feed rates were 11.21, 23.08 and 35.15 kg/h, respectively. Among all the treatments, the output capacity was maximum of (36.14 kg/h) in F3M1S3 treatment combination and minimum output capacity of 10.07 kg/h was recorded in F1M3S1 treatment combination.

The output capacity trends at the different moisture content and different rotational speeds for feed rate of 20 kg/h is shown in the Fig. 4.10. It was found that the output capacity increased with increase in the rotational speed for all the moisture content tested. And, the maximum output capacity were obtained at 11.23% moisture content for all the rotational speeds while it was minimum for 15.36% moisture content. The output capacity were decreased significantly as the moisture content increased from 11.23 to 15.36 % moisture content, and increase as the rotational speed increases from 415 to 510 rpm.

The effect of rotational speed and moisture content on output capacity at 40 kg/h feed rate is shown in Fig. 4.11. As the rotational speed increased from 415 to 510 rpm, the output capacity increased for all the moisture content. Among the different rotational speed, 510 rpm rotational speed resulted in maximum output capacity whereas 415 rpm gives minimum output capacity for all the moisture content.

The relation between the rotational speeds, moisture content and output capacity at the feed rate of 60 kg per hectare is shown in Fig. 4.12. As the moisture content increased, the output capacity decreased. As feed rate is increased output capacity is increases. At 20 kg/h of feed rate the output capacity ranges from 10.07 to 12.21 kg/h, for 40 kg/h it in between 21.82 to 24.06 kg/h and for 60 kg/h of feed rate its ranges from 33.91 to 36.14 kg/h.

From Table 4.9 it was observed that the output capacity varied from 10.07 to 36.14 kg/h. An increased feed rate resulted in increased output capacity (Fig. 4.10 Fig. 4.11 and Fig. 4.12) for all the rotational speed and moisture content. This may be due to the as feed rate increased percentage of unshelled grains were increases i.e. more friction created between the rotating shaft with cobs and taper arrangement provided inside the top cover, hence the output capacity i.e. shelling output is increases according to the increasing of feed rate.

The output capacity increased with increasing of rotational speed. When rotational speed is increases then the less time is required for shelling of grains due to input of higher energy, more friction is created so the shelling of cob is in a fast rate hence the output i.e. output capacity of maize dehusker cum sheller is increases.

The lowest output capacity was obtained at the moisture content of 15.36% and the highest output capacity was obtained at the moisture content of 11.23%. Increasing moisture content of grains were obstruct the shelling process. When grain moisture increased, weight of grain is increased and dryness of grain is reduced so shelling of maize cobs requiring of more time due to less creating friction in a machine. The lowest output capacity was obtained at 15.36 % of moisture content, 415 rpm of speed and 20 kg/h of feed rate.

The analysis of variance of output capacity was given in table 4.10. The factor A, B and C represents feed rate, moisture content, and rotational speed respectively. From the table it can be clearly seen that, the main effect of factors A, B & C on output capacity were significantly different at both 1 per cent and 5 per cent level of significance. All the interactions of B and C were significantly different at both 1 per cent and 5 per cent level of significance. While considering the multiple interactions (ABC) of the data were significantly different at both 1 per cent and 5 per cent level of significance.

Table 4.10 Analysis of variance of output capacity

Source of Variation	DF	Sum of Squares	Mean Squares	F-Calculated	P value
Factor A	2	7743.58	3,871.790	12,875.058	0.000
Factor B	2	11.328	5.664	18.836	0.000
Int A X B	4	12.756	3.189	10.596	0.000
Factor C	2	24.01	12.005	39.922	0.000
Int A X C	4	16.392	4.098	13.615	0.000
Int B X C	4	11.872	2.968	9.862	0.000
Int A X B X C	8	30.336	3.792	12.596	0.000
Error	54	16.304	0.301		
Total	80	7866.578			

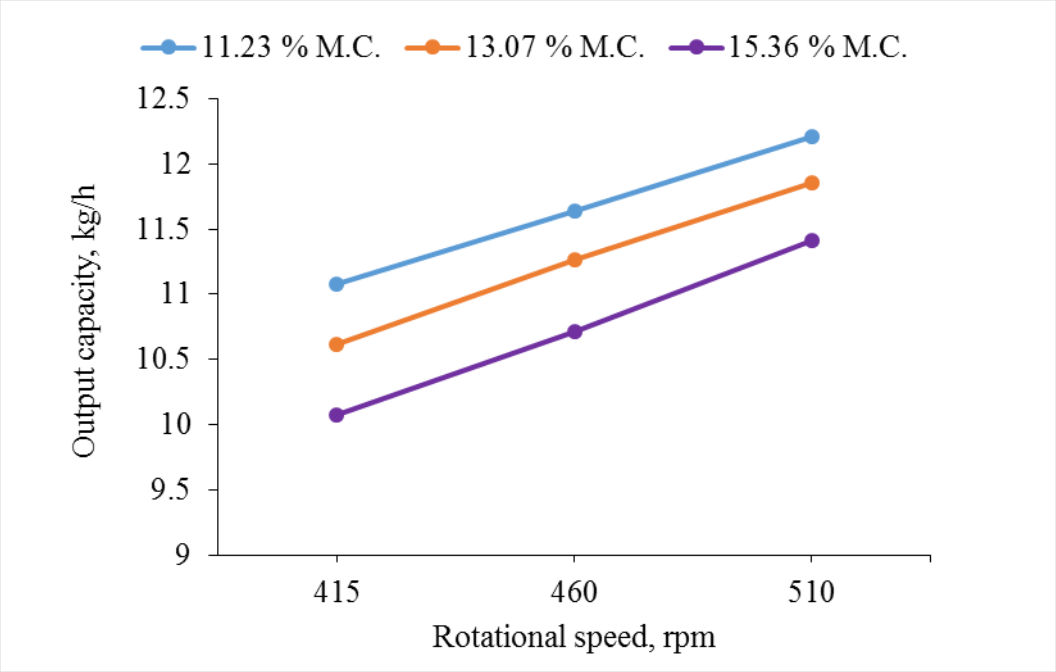

Fig. 4.10 Effect of rotational speed and moisture content on output capacity at feed rate of 20 kg/h

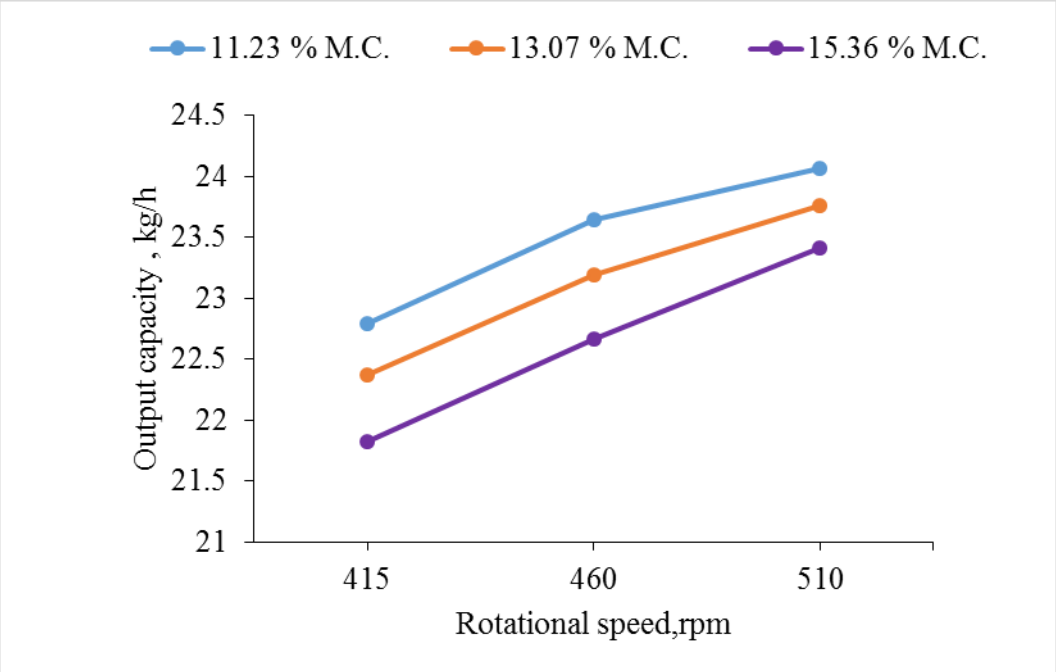

Fig. 4.11 Effect of rotational speed and moisture content on output capacity at feed rate of 40 kg/h

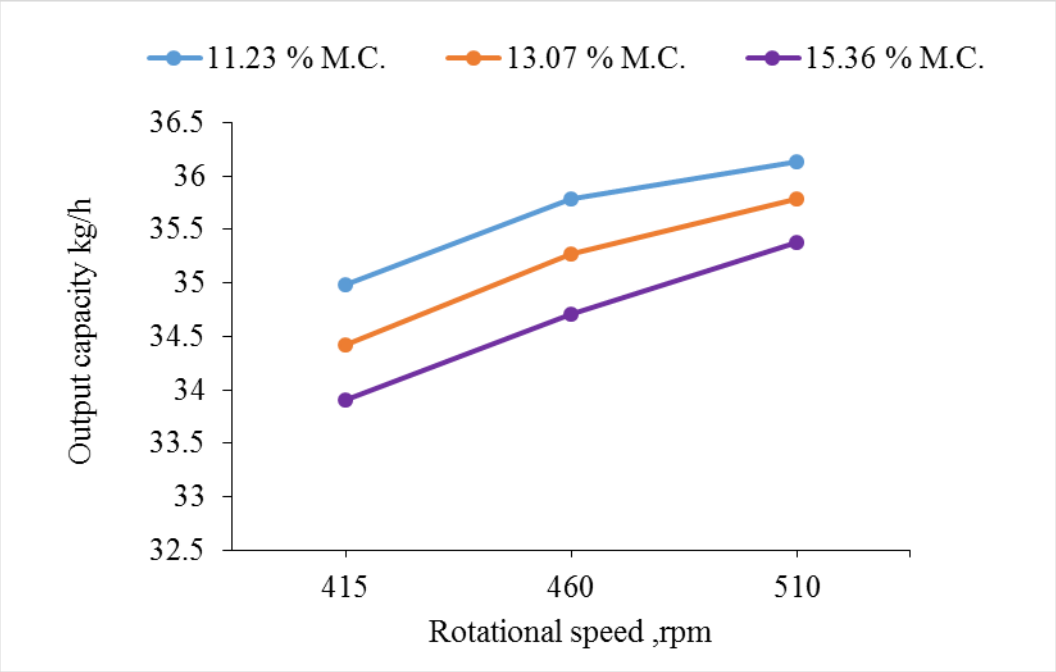

Fig. 4.12 Effect of rotational speed and moisture content on output capacity at feed rate of 60 kg/h

4.3 Cost economics of mobile maize dehusker cum sheller

It consist of cost economics of developed mobile unit and cost economics of developed maize dehusker cum sheller. The total operating cost is calculated by using equation 3.39. The total production cost of the mobile maize dehusker cum sheller was found to be Rs. 1, 78,000 and the total operating cost per hour was estimated as 169.22 Rs/h. and 468 Rs/q. Cost of manual dehusking and shelling by tubular sheller was found Rs 620/q so there is net saving of 152 Rs/q with respect to manual threshing.

Table 4.11 Cost economics of mobile maize dehusker cum sheller

Sl. No.	Particulars	Details
1	Total production cost (Rs)	1,78,000
2	Total fixed cost (Rs/h)	107.89
3	Total variable cost (Rs/h)	61.33
4	Total operating cost per hour	169.22

CHAPTER V

SUMMARY AND CONCLUSION

Present investigation had undertaken at the department of Farm Machinery and Power, College of Agricultural Engineering & technology, Bhubaneswar, Odisha, on important issues of dehusking and shelling of maize cob with objectives viz., to design and develop a mobile solar powered maize dehusker cum sheller, to evaluate the performance of developed maize dehusker cum sheller and to study the cost economics of developed machine. The results are summarized and the conclusions drawn were presented under here.

In the present study, one variety of maize (OMH 14-27) were selected which is procured from field of the college of agriculture. Some of the physical properties (size, sphericity, true density, bulk density, porosity, and surface area) of the maize cobs & grains were determined using standard procedure. Various components of the mobile maize dehusker cum sheller prototype were designed. The machine components were developed and fabricated in the laboratory. The developed solar powered mobile maize dehusker cum sheller was operated by 0.5 hp DC motor with power rating of 370 W.

The operational parameters of prototype for efficient performance, the performance evaluation of the maize dehusker cum sheller were carried out with major influencing factors viz., feed rates (F1 = 20 kg/h, F2 = 40 kg/h and F3 = 60 kg/h), rotational speeds (S1 = 415 rpm, S2 =460 rpm, S3=510 rpm) and Moisture contents (M1= 11.23 %, M2 = 13.07 %, M3 = 15.36%). The performance of dehusker cum sheller was evaluated with OMH 14-27 (Odisha maize hybrid) variety. The various parameters are viz., dehusking efficiency %, shelling efficiency %, total losses %, output capacity kg/h were determined and analysed. The following conclusions were made out of the study.

- The mean values of dimensions of un-dehusked maize cob such as length, diameter and weight were determined and found to be 214.19 mm, 45.29 mm, 184.02 g, respectively.
- The linear dimensions of maize grains (l x b x t) were found to be 9.79 x 8.23 x 5.50 mm, respectively.

- The arithmetic mean diameter was 7.84 mm, geometric mean diameter was 7.60 mm, sphericity was 0.78, surface area was 182.167 mm^2, bulk density was 0.75 g/cm^3, true density was 1.31 g/cm^3 and porosity was 43.09 %.
- The maximum dehusking efficiency was of 98.79% in 20 kg/h feed rate whereas lowest dehusking efficiency of 95.93% was recorded in 60 kg/h feed rate. The dehusking efficiency increases with increase in rotational speed and decreases with increase in feed rate and moisture content among the different treatments.
- The maximum shelling efficiency of 96.84% was observed with 20kg/h feed rate for the 11.23% of moisture content and 510 rpm rotational speed where as it was minimum of 93.31% for 60 kg/h feed rate at 15.36% moisture content and 415 rpm rotational speed. The maximum mean shelling efficiency was found to at 40 kg/h of feed rate.
- The total losses were found to be decreases with an increase in rotational speed. The total losses were observed to be increases with increase in feed rate and moisture content. At 60 kg/h of feed rate,15.36 % moisture content, 415 rpm of rotational speed total losses of grains were found to be maximum (7.08 %) while it was minimum (4.31%) on 11.23 % of moisture content, 510 rpm of rotational speed & 40 kg/h of feed rate.
- The maximum output capacity (36.14 kg/h) was obtained for 60 kg/h feed rate whereas minimum (10.07 kg/h) obtained for 20 kg/h feed rate.
- The mobile unit (OMSPAM) performance revels that, by measuring of solar radiations incident on a solar photovoltaic panels, concluded that when front wheel of OMSPAM vehicle remains towards the sun position then both the solar panels were getting the maximum and nearly same radiations.
- Generally OMSPAM takes 7 to 8 hours for full charging of battery & the full charge battery holds for 5-6 hours in working condition.
- The vehicle travels at a speed of 35 km/h (25 km/h fully laden) & range of distance travelled is 120-130 km with solar panel (on sunny day).
- The total production cost of the mobile maize dehusker cum sheller was found to be Rs. 1, 78,000 and the operating cost per hour as 169.22 Rs/h. Cost of manual dehusking and shelling by tubular sheller was found Rs 620/q so there is net saving of 152 Rs/q with respect to manual threshing.

CHAPTER VI

SUGGESTIONS FOR FUTURE WORK

The following suggestions are made out of the present study for future work

1. The OMSPAM (OUAT Multipurpose Solar Powered Agri Machinery) should be tested for paddy threshing, millet threshing, pulses threshing, groundnut decorticator, juice maker machine and water pumping purpose, etc.
2. Studies on modification of the mobile unit should be conducted for the above mentioned job.
3. The OMSPAM should develop for a large machine capacity, app oriented, global positioning system (GPS) based, so it can be available for commercial purpose.
4. A multi crop thresher should be developed by importing necessary modifications.
5. To enhance and achieve uniform and higher feed rate & clean grain, the system should be automated with suitable modification in feeding unit and provided with blower, so that higher and quality output can be ensured.

REFERENCES

Abba, M. U. and Atiku, A. A., 2010, Effect of moisture content on maize shelling speed using a manually operated hand sheller in Mubi, Admawa State. *Continental J. Engg. Sci.,* **5**: 14-17.

Ademosun, O.C., Adesuyi, S.A., 1995, Effect of the major machine and operational parameters on the performance of a maize dehusker – sheller. *Agrosearch* **1**(1):7-16

Ajav, E. A. and Igbeka, J. C., 1995, Performance evaluation of a maize sheller. Nigerian Defence Academy Kaduna, 7622.

Akubuo, C. O., 2002, Performance evaluation of a local maize sheller. *Biosystems Engg.,* **83**(1): 77-83.

Alam, M. M. and Momin, M.A., 2009, Performance of existing maize shellers in Bangladesh. *Progress. Agric*. **20**(1&2):207-220

Anazodo, U. G. N., Wall, G. L. and Norries, R., 1980. Corn physical and mechanical properties as related to combine cylinder performance. *Canadian Agril. Engg.* **23**(1): 23-30.

Anonymous, 1986, Consolidated final report 1975-1986 of operational research project on post-harvest technology (Coimbatore center): pp. 72-78.

Askari Asli-Ardeh, E.and Abbaspour-Gilandeh, Y., 2008. Investigation of the effective factors on threshing loss, damaged grains percent and material other than grain to grain ratio on an auto head feed threshing unit. *American Journal of Agricultural and Biological Sciences* **3**(4):699-705

Awasthi, N., Sahu, A., Singh P., 2017. Efficiency assessment of maize sheller in context of drudgery of farm women. *International Journal of Science and Research,* **6**(5):1671-1673

Azeez, (2017), Performance evaluation of a developed maize sheller. *Journal of Advancement in Engineering and Technology,* **5**(2):1-4

Bansal, K. N. and Kumar, L. S., 2009, Design and development of an axial flow thresher for seed crops. *J. Agril. Engg.* **46**(1): 1-8.

Behera, B. K., Dash, S. K. and Das, D. K., 1990, Development and testing of a power operated wheat thresher. *Agril. Mechanization in Asia, Africa and Latin America*, **21**(4): 15-21.

Brar, I. S., Dixit, A.K., Khurana, R.and Gautam, A., 2017. Studies on Physical Properties of Maize (Zea mays L.) Seeds. *International Journal of Current Microbiology and Applied Sciences,* ISSN: 2319-7706, **6**(10): 963-970

Chhabra, N. and Kaur, A., 2017, Studies on physical and engineering characteristics of maize, pearl millet and soybean. *Journal of Pharmacognosy and Phytochemistry*, **6**(6): 01-05

Chhabra, S. D. and Singh, K. N., 1977, Effect of cylinder speed and peg spacing of axial flow thresher on wheat threshing. *J. Agril. Engg.* **14**: 141-144.

Chilur Rudragouda and Sushilendra, 2016, Investigation on engineering properties of maize for development of maize dehusker cum sheller. *International Journal of Agriculture Sciences* **8**(31): 1661–5

Chilur, R., Sushilendra, S.and Palled, V., 2012. Effect of operational parameters on dehusking cum-shelling efficiency and broken grain percentage of maize dehusker-cum-sheller. *International Journal of Scientific Research DOI: 10.15373/22778179*

Chilur, R., Sushilendra, S.and Palled, V., 2012. Effect of operational parameters on dehusking cum-shelling efficiency and broken grain percentage of maize dehusker-cum-sheller. *International Journal of Scientific Research DOI: 10.15373/22778179*

Chowdhury, M. H. and Buchele, W. F., 1976, Development of a numerical damage index for critical evaluation of mechanical damage of corn. *Trans. of the ASAE*. **19**(3): 428-432.

Chowdhury, M. H. and Buchele, W. F., 1978. The nature of corn kernels Damage inflected in the shelling crescent of grain combines. *Trans. of the ASAE*, **21**(4): 610-614

Coskun Bulent, M., Yalcin Ibrahim and Cengiz Ozarslan, 2006, Physical properties of sweet corn seed (Zea mays saccharata Sturt.). *J. Food Engg.* **74**: 523–528.

Danfulani Ahmad Muhammad, 2009, Design and construction of a maize sheller. Nigerian Defence Academy Kaduna, 7622.

Desta, K. and Mishra, T. N., 1990, Development and performance evaluation of a sorghum thresher. *Agril. Mechanization in Asia, Africa and Latin America*, **21**(3): 33-37.

El Fawal, Y. A., Tawfik, M. A. and El Shal, A. M., 2009, Study on physical and engineering properties for grains of some field crops. Misr *J. Agril. Engg*. **26**(4): 1933- 1951.

Ghaly, A. E., 1985, A stationary threshing machine design construction and performance evaluation. *Agril. Mechanization in Asia, Africa, Latin America*, **16**(3): 193-195.

Gite, L. P. and Singh, G., 1997, Ergonomics in agricultural and allied activities in India. Technical Bull., No. CIAE/97/70. Central Institute of Agril. Engg. Bhopal.

Gole, S. V. and Rashmi Shahu, 2009. Ergonomically designed thresher. *Agril. Mechanization in Asia, Africa and Latin America*, **40**(2): 73-75.

Gupta, P. K., Surendra Singh, and Sharma, V. K., 1985, Performance studies on tractor operated combine for maize threshing. *Agril. Engg, Today*, **9**(4): 40-42.

Hamid, F., Jalil Al, Stephen M., Mofazzal, H. and Chowdhury, 1980, Laboratory studies of a low damage corn shelling machine. *Trans. of the ASAE*, **10**(1): 278 – 283.

Harrington, R. E., 1980, Thresher Principles confirmed with multi-crop thresher. *J. Agril. Engg.* **7**(2): 49-61.

Hassan Abdulkadir Baba, Abolarin, M. S. and Olugboji, O. A., 2009, Design and construction of maize threshing machine. Assumption Univ. *J. Techno*., **12**(3): 199-206

Hussain, S. Z., Naik, H. R., Rather, A. H. and Junaid Khan, 2009, Comparative evaluation of horizontal maize cob sheller with traditional methods of maize shelling. Res. on Crops **10**: 168-170.

Jagdale, M., Mohod, A. G., Khandetod, Y. P., Dharaskar, R. M. and Dhande, K. G., 2017, Evaluation of solar photovoltaic (SPV) Operated Paddy Winnower. *Journal of Advanced Agricultural Research & Technology*. **1**(2): 177 – 182

Jayan, P. R. and Kumar, V. J. F., 2004. Planter design in relation to the physical properties of seeds. *J. Trop. Agric.*, **42**(1-2): 69-71.

Joshi Hem Chandra, 1981, Design and selection of thresher parameters and components. *Agril. Mechanization in Asia, Africa, Latin America*, **12**(2): 61-70.

Karthik, S.K., Mahesh, T., Sumanth, B. & Tanmay, M., 2017, Study of Physical and Engineering Properties of Corn (Zea mays). *Bulletin of Environment, Pharmacology and Life Sciences*, **6**(1):404-409

Kumar, a. B., Rao, p.v.k.j. and Edukondalu, 2017, Physical properties of maize grains. *International Journal of Agriculture Sciences*, ISSN: 0975-3710&E-ISSN: 0975-9107, **9**(27):4338-4341

Kumar, A., Mohan, D., Patel, R., Varghese, M., 2002. Development of grain threshers based on ergonomic design criteria. *Applied Ergonomics* **33**: 503-508

Kumar, M., Kumar, S., Kumar, D., Rani, P., 2018, Impact assessment of PAU maize dehusker –cum-sheller with the local variety devaki. *International Journal of Current Microbiology and Applied Sciences* (7): 3526-32

Kumar, V. J. F. and Parvathi, S., 1998, Ergonomic study of manually operated corn shellers. *Int. J. Agril. Engg.* **7**(1): 37-45.

Liao, K., Paulsen, M. R. and Reid, J. F., 1994, Real-time detection of color and surface defects of corn kernels using machine vision. *J. Agril. Engg. Res.*, **59**(4): 263-271.

Mahatale, Y. V. and Meheta, A. K., 2012. Physiological evaluation of different manually operated maize shelling methods. *International Journal of Applied Agricultural Research*, **7**(3): 203-207

Mahmoud, A. R. and Buchele, W. F., 1975, Distribution of shelled corn throughput and mechanical damage in a combine cylinder. *Trans. ASAE*, **18**(2): 448-452

Matpathi, R. 2015 Virtual prototype modelling and analysis of low cost hand operated maize desheller. *Indian J. Sci. Res.* **11**(1):127-132

Maurya , V. N., Ogubazghi , G., Misra ,B. P., Maurya ,A. K. , Diwinder, K. A.2015, Scope and review of photovoltaic solar water pumping system as a sustainable solution enhancing water use efficiency in irrigation. *American Journal of Biological and Environmental Statistics,* **1**(1): 1-8

Mekhilef, S., Faramarzi, S .Z., Saidur, R.,and Zainal, S.,2013, The application of solar technologies for sustainable development of agricultural sector. *Renewable and Sustainable Energy Reviews* **18**: 583–594

Metwally, K. A. 2010. Study the effect of some operational factors on hammer mill. MSc thesis of Department of Agricultural Engineering, Faculty of Agriculture, Zagazig University. Egypt.

Montellano, C., González Fuentes, J. M., Ayuga-Téllez, E. and Ayuga, F., 2012, Determination of the mechanical properties of maize grains and olives required for use in DEM simulations. *J. Food Engg*. **111**: 553–562.

Mudgal, V. D., Jain, N. K., Bordia, J. S. and Seth, P., 1998, Research Digest (1992-97) Udaipur Centre. AICRP on PHT, CTAE, Udaipur, pp. 17- 18.

Nalbant M., 1990, Mechanical damage on corn kernel in shelling corn ear. *Agril. Mechanization in Asia, Africa, Latin America*, **21**(2): 37-40.

Naveenkumar, D.B. and Rajshekarappa, K.S., 2012, Performance evaluation of a power operated maize sheller. *International Journal of Agricultural Engineering*, **5**(2): 172 –177

Nkakini, S. O., Aytamuno, M. J., Maeba, G. P. D., Ogaji, S. O. T. and Probert, S. D., 2007, manually powered continuous-flow sheller. *Applied Energy*, **84**: 1175-1186.

Olaoye, J. O., 2002, Performance modeling of a multipurpose crop threshing machine for Assessment of grain loss. Being an aspect of the research findings for the 1997, Senate Research Grant, University of Ilorin, and Ilorin Nigeria.

Pathak,S., 2008, Design, development and evaluation of a power operated maize sheller (Spiked Disk Type). *Int. J. Agric. Sci.,* **4**: 215-219

Patil, K., Pandit, S., Pol G., Kadam, S., Jadhav, A., 2016. Design and fabrication of corn shelling and threshing machine. *International Journal of Innovative Research in Science, Engineering and Technology,* **5**(7): 13981-13986

Saeed, M. A., Khan, A. S., Rizvi, H. A. and Tanveer, T., 1995, Testing and evaluation of holdon paddy thresher. *Agril. Mechanization in Asia, Africa and Latin America*, **26**(2): 47-51.

Sakun, V. A., 1963, Testing and threshing with logarithmic shape of teeth. *Agric. Hort. Engg. Abst*. **16**(2): 54-64.

Samreen, Madhava, M. and Rama Rao, A. 2017, Performance evaluation of solar power operated paddy winnower. *International Journal of Engineering Technology Science and Research*. **4**(8): 1088-1094

Sandhar, N. S. and Panwar, J. S., 1974, Force and energy requirements for detaching grains from cobs. *J. Agril. Engg.* **10**(5 & 6): 29-32.

Sangamithra, A., Swamy G. J., Sorna P., R., Nandini, K., Kannan, K., Sasikala, S. and Suganya, P., 2016, Moisture dependent physical properties of maize kernels. *International Food Research Journal* **23**(1): 109-115

Singh Santosh and Pathak, B. S., 1973, Impact phenomena in threshing affected by different parameters, *J. Agril. Engg.* **10**(2): 54-64.

Singh, B. and Kumar, A., 1976, Effect of cylinder type on threshing effectiveness and damage of wheat. *J. Agril. Engg.* **13**(3): 124-129.

Singh, S. P., and Singh, P., 2010, Hand Operated maize dehusker-sheller for farm women. *Agril. Engg. Today*, **34**(1): 152-154.

Singh, S. P., and Singh, P., 2010, Hand Operated maize dehusker-sheller for farm women. *Agril. Engg. Today*, **34**(1): 152-154.

Singh, S. P., Pratap Singh and Surendra Singh, 2011, Status of maize threshing in India. *Agril. Mechanization in Asia, Africa and Latin America*, **42**(3): 21-28.

Singh, S. P., Singh, P., Singh, S., 2012. Design and development of hand operated maize dehusker-sheller for farm women. *Agricultural Mechanization in Asia, Africa & Latin America* **43**(3)

Singh, S., 2008, A farm mechanization scenario in India. Paper presented in All India National Seminar on Status of Farm Mechanization and Farm Equipment Manufacturing at CTAE, Udaipur on March 15-16.

Sobukola, O. P., Kajihausa, O. E., Onwuka, V. I. and Esan, T. A.2013, Physical properties of high quality maize (Swam 1 variety) seeds (Zea mays) as affected by moisture levels. *African Journal of Food Science,* **7**(1): 1-8

Srison, W., Chuan-Udom, S., Saengprachatanarak, K., 2016, *Agriculture and Natural Resources*, **50**:421-425

Swapan, K. Roy, Mike Albu and Abdur Rob., 2007, Business rationale for investment on power operated maize sheller in Bangladesh. *Agril. Engg. Int.: CIGR E-J.*, **9**: 1-13.

Tajuddin, T. and Karunanithi, 1996, Comparative performance evaluation of different hand operated maize shellers. *J. Agril. Engg.* **20**: 1-4.

Tarighi, J., Mahmoudi A. and Alavi, N., 2011. Some mechanical and physical properties of corn seed (Var. DCC 370). *African J. Agril. Res*., **6**(16): 3691-3699.

Tastra, I. K., 2009, designing and testing of improved maize sheller. *Agril. Mechanization in Asia, Africa and Latin America*, **40**(1): 12-17.

Tastra, I. K., Ginting, E. and Merx, R., 1990, Determination of the optimum moisture content for shelling maize using local sheller. Internal Report MARIF ATA272/NRC, pp. 33.

Tastra, I. K., Ginting, E., Merx, R., Solkhe, V. M., Gajendra Singh and Llangantileks S. G., 1992, Determination of the optimum moisture content for shelling corn using local sheller. Int. Agril. Engg. Conference Proc., held in Bangkok Thailand, **11**: 529-540

Tiwari, P.S., Gite, L. P., Pandey,M. M and Shrivastava A.K., 2011, Pedal power for occupational activities: Effect of power output and pedalling rate on physiological responses. *International Journal of Industrial Ergonomics* **41**: 261-267.

Tiwari, P.S., Pandey, M. M., Gite, L. P. and Shrivastava, A. K., 2010, Effect of operating speed and cob size on performance of a rotary maize sheller. *J. Agril. Engg.* **47**(2): 1-8.

Tripathi, S. P., Somvanshi, S. P. S., Bhadhoria1 U. P. S. and Singh, A., 2016 .Ergonomic evaluation of hand operated maize sheller on farm women of mandsaur district (m. P.), India. *Plant Archives* **16** (1):303-305

Vas, F. M. and Harrison, H. D., 1969. The effect of selected mechanical threshing parameters on kernel damage and threshability of Wheat. *Canadian Agril. Engg.* **11**(2): 83-87.

Victor, I. O., Ndirika and Buys, R. J. 2006, Intermediate agricultural processing technologies for cereal crops in South Africa. *Agril. Mechanization in Asia, Africa and Latin America*, **37**(2): 24-28.

Vyavahare, R.T. and Kallurkar, S.P., 2015. Ergonomics evaluation of maize sheller cum dehusker. *International Journal of Current Engineering and Technology*, **5**(3)

Waelti,H.and Buchele F., 1969. Factors affecting corn kernel damage in combine cylinders. *Agricultural and Biosystems Engineering*. Project no. 1673

Watane, N. D. and Dafde, R. A., 2013 Automatic solar tracker system. *International Journal of Scientific & Engineering Research*, **4**(6): 93-100

Yadav Rajvir, Pund Sahastrarashmi, Patel, N. C. and Gite, L. P., 2010, Analytical study of strength parameters of Indian farm workers and its implication in equipment design. *Agril. Engg. Int.: CIGR E-J.*, **12**(2): 49-54.

APPENDIX A

Appendix A-1 Physical properties of maize of OMH 14-27 variety

Replication I

No. of observations	Length of Undehusked cob (mm)	Dia. of Undehusked cob (mm)	Weight of Undehusked cob (g)	Linear dimensions of maize grain, mm			Arithmetic mean, mm	Geometric mean, mm	Sphericity	Surface area, mm^2
				Length	Width	Thickness				
1	244.15	48.51	100.32	9.90	8.00	5.30	7.73	7.49	0.76	176.12
2	248.23	47.00	144.45	6.70	5.50	6.00	6.07	6.05	0.90	114.87
3	241.00	48.23	250.00	10.00	9.00	6.00	8.33	8.14	0.81	208.33
4	230.50	42.00	210.43	10.00	8.50	5.00	7.83	7.52	0.75	177.59
5	242.57	55.21	100.41	10.23	8.50	5.50	8.08	7.82	0.76	192.13
6	264.00	50.00	150.00	10.20	9.00	5.10	8.10	7.76	0.76	189.42
7	248.00	45.22	154.63	9.50	7.50	6.10	7.70	7.57	0.80	180.26
8	200.00	48.13	163.00	10.50	8.23	5.50	8.08	7.80	0.74	191.33
9	195.00	45.09	178.49	10.00	7.50	5.50	7.67	7.44	0.74	174.09
10	255.54	46.25	154.00	10.47	7.00	5.50	7.66	7.39	0.71	171.43
11	225.00	44.47	200.00	8.30	8.36	5.20	7.29	7.12	0.86	159.22
12	230.00	44.85	150.00	10.50	8.50	4.10	7.70	7.15	0.68	160.72
13	234.00	46.00	150.50	10.25	7.20	6.50	7.98	7.83	0.76	192.51
14	220.50	42.55	200.86	10.27	8.20	6.10	8.19	8.01	0.78	201.51
15	153.80	47.50	240.47	9.40	7.50	5.25	7.38	7.18	0.76	161.95
16	174.67	42.00	203.60	9.70	7.80	6.00	7.83	7.69	0.79	185.56
17	190.46	43.00	246.67	10.00	9.00	5.30	8.10	7.81	0.78	191.79
18	255.64	49.65	163.50	7.80	8.20	6.20	7.40	7.35	0.94	169.57
19	190.00	48.00	146.55	9.30	7.20	6.00	7.50	7.38	0.79	171.05
20	155.01	44.66	245.00	6.70	5.50	6.20	6.13	6.11	0.91	117.41
Mean	219.90	46.42	177.64	9.49	7.81	5.62	7.64	7.43	0.79	174.34
SD	33.62	3.19	45.34	1.18	1.00	0.56	0.60	0.54	0.07	23.98
Cov	0.15	0.07	0.26	0.12	0.13	0.10	0.08	0.07	0.08	0.14

Replication II

No. of observations	Length of Undehusked cob (mm)	Dia. of Undehusked cob (mm)	Weight of Undehusked cob (g)	Linear dimensions of maize grain, mm			Arithmetic mean, mm	Geometric mean, mm	Sphericity	Surface area, mm^2
				Length	Width	Thickness				
1	150.00	42.49	249.80	10.00	9.20	5.10	8.10	7.77	0.78	189.69
2	183.42	41.50	146.87	10.23	9.40	5.10	8.24	7.89	0.77	195.37
3	190.70	44.80	150.42	9.50	9.00	5.50	8.00	7.78	0.82	189.98
4	200.10	45.50	200.00	11.00	9.28	5.50	8.59	8.25	0.75	213.81
5	240.60	43.00	200.40	9.00	8.70	5.50	7.73	7.55	0.84	179.16
6	230.40	52.21	100.00	10.00	9.30	5.00	8.10	7.75	0.77	188.56
7	225.00	54.36	145.00	10.00	9.10	5.00	8.03	7.69	0.77	185.85
8	210.00	44.00	142.00	8.20	7.23	6.00	7.14	7.09	0.86	157.72
9	245.00	50.00	165.00	10.50	9.00	6.00	8.50	8.28	0.79	215.21
10	210.00	42.56	187.00	10.25	8.24	5.25	7.91	7.63	0.74	182.68
11	224.60	54.50	192.42	9.10	7.80	6.00	7.63	7.52	0.83	177.83
12	234.59	41.00	164.00	9.10	7.21	6.00	7.44	7.33	0.81	168.75
13	217.00	45.00	206.14	8.40	9.27	5.24	7.64	7.42	0.88	172.83
14	269.03	43.50	245.85	7.60	9.26	5.50	7.45	7.29	0.96	166.86
15	245.00	46.00	271.47	10.00	8.60	4.28	7.63	7.17	0.72	161.35
16	241.00	45.50	193.00	7.80	9.00	5.20	7.33	7.15	0.92	160.46
17	234.00	50.00	184.60	9.30	8.80	6.50	8.20	8.10	0.87	206.25
18	228.00	45.50	172.45	6.40	5.50	6.00	5.97	5.96	0.93	111.42
19	221.57	47.00	164.90	10.00	9.20	5.25	8.15	7.85	0.78	193.40
20	241.50	44.76	153.94	10.00	9.60	6.00	8.53	8.32	0.83	217.49
Mean	222.08	46.16	181.76	9.32	8.63	5.50	7.82	7.59	0.82	181.73
SD	26.38	4.02	40.97	1.14	1.00	0.52	0.60	0.54	0.07	24.52
Cov	0.12	0.09	0.23	0.12	0.12	0.09	0.08	0.07	0.08	0.13

Replication III

No. of observations	Length of Undehusked cob (mm)	Dia. of Undehusked cob (mm)	weight of Undehusked cob (g)	Linear dimensions of maize grain, mm			Arithmetic mean, mm	Geometric mean, mm	Sphericity	Surface area, mm^2
				Length	Width	Thickness				
1	234.28	42.29	100.52	10.96	9.70	6.00	8.89	8.61	0.79	232.79
2	240.22	41.85	142.50	11.96	9.87	5.00	8.94	8.39	0.70	221.05
3	183.41	44.80	156.43	10.28	9.67	6.00	8.65	8.42	0.82	222.60
4	250.46	45.55	245.77	10.76	8.11	6.00	8.29	8.06	0.75	204.08
5	247.00	43.00	214.80	11.23	7.71	5.10	8.01	7.61	0.68	182.17
6	150.00	52.14	148.40	10.25	9.34	5.50	8.36	8.08	0.79	204.85
7	209.00	54.60	197.55	9.20	7.55	5.20	7.32	7.12	0.77	159.33
8	224.00	44.00	156.64	9.40	8.24	5.00	7.55	7.29	0.78	166.92
9	243.00	41.20	154.66	8.40	8.29	6.00	7.56	7.48	0.89	175.58
10	241.00	47.30	177.48	7.20	9.24	5.50	7.31	7.15	0.99	160.72
11	216.00	42.60	166.51	10.20	9.63	5.20	8.34	7.99	0.78	200.74
12	215.00	42.10	143.44	10.25	9.64	5.70	8.53	8.26	0.81	214.26
13	234.00	45.90	155.45	9.40	9.00	5.20	7.87	7.61	0.81	181.72
14	217.00	44.80	122.87	9.70	9.10	4.20	7.67	7.18	0.74	162.13
15	204.00	42.70	144.60	11.00	7.72	6.50	8.41	8.20	0.75	211.40
16	195.00	44.80	175.80	10.50	7.29	6.00	7.93	7.72	0.73	187.01
17	204.00	47.80	183.00	10.00	8.56	5.25	7.94	7.66	0.77	184.32
18	206.00	41.50	199.00	9.90	8.11	5.20	7.74	7.47	0.75	175.49
19	231.40	50.00	200.00	8.50	9.37	5.00	7.62	7.36	0.87	170.05
20	231.80	44.80	245.00	10.98	7.58	6.00	8.19	7.93	0.72	197.74
Mean	218.83	45.19	171.52	10.00	8.69	5.48	8.06	7.78	0.78	190.75
SD	24.53	3.63	37.37	1.11	0.86	0.54	0.49	0.46	0.07	22.46
Cov	0.11	0.08	0.22	0.11	0.10	0.10	0.06	0.06	0.09	0.12

Replication IV

No. of observations	Length of Undehusked cob (mm)	Dia. of Undehusked cob (mm)	Weight of Undehusked cob (g)	Linear dimensions of maize grain, mm			Arithmetic mean, mm	Geometric mean, mm	Sphericity	Surface area, mm^2
				Length	Width	Thickness				
1	228.00	45.20	210.10	11.00	7.79	6.00	8.26	8.01	0.73	201.62
2	221.00	43.10	213.00	10.28	8.16	5.00	7.81	7.49	0.73	176.03
3	241.00	46.20	245.00	10.76	7.75	5.50	8.00	7.71	0.72	186.84
4	237.00	43.50	153.60	11.23	9.45	5.30	8.66	8.25	0.74	214.06
5	180.70	49.20	146.00	10.25	9.57	5.40	8.41	8.09	0.79	205.67
6	182.00	41.30	249.70	9.80	7.58	5.90	7.76	7.60	0.78	181.27
7	200.00	42.70	246.00	9.00	7.82	6.20	7.67	7.58	0.84	180.74
8	246.00	46.50	145.50	8.80	8.00	6.00	7.60	7.50	0.85	176.86
9	265.00	46.00	176.00	7.20	7.00	5.50	6.57	6.52	0.91	133.56
10	240.00	42.80	184.60	10.20	8.80	5.00	8.00	7.66	0.75	184.16
11	246.70	41.50	246.50	10.25	8.80	5.50	8.18	7.92	0.77	196.88
12	232.00	43.10	247.30	9.60	7.75	5.25	7.53	7.31	0.76	167.87
13	241.00	40.23	189.00	8.70	7.55	4.60	6.95	6.71	0.77	141.46
14	201.00	42.10	195.00	11.75	8.20	6.50	8.82	8.56	0.73	229.96
15	163.00	43.60	147.00	10.96	7.26	6.00	8.07	7.82	0.71	191.90
16	148.00	48.70	168.00	10.17	7.24	5.25	7.55	7.28	0.72	166.71
17	205.00	45.60	248.60	10.00	7.86	5.00	7.62	7.32	0.73	168.56
18	195.00	42.30	249.00	10.00	8.11	6.00	8.04	7.87	0.79	194.36
19	234.00	41.60	257.00	10.00	8.49	5.00	7.83	7.52	0.75	177.45
20	201.00	47.50	154.00	10.27	8.57	6.00	8.28	8.08	0.79	205.25
Mean	215.37	44.14	203.55	10.01	8.09	5.55	7.88	7.64	0.77	184.06
SD	31.08	2.57	42.30	1.02	0.69	0.50	0.53	0.48	0.05	22.85
Cov	0.14	0.06	0.21	0.10	0.09	0.09	0.07	0.06	0.07	0.12

Replication V

No. of observations	Length of Undehusked cob (mm)	Dia. of Undehusked cob (mm)	Weight of Undehusked cob (g)	Linear dimensions of maize grain, mm			Arithmetic mean, mm	Geometric mean, mm	Sphericity	Surface area, mm^2
				Length	Width	Thickness				
1	246.00	42.30	167.77	10.00	7.85	5.50	7.78	7.56	0.76	179.46
2	248.00	41.46	198.52	10.00	7.69	5.24	7.64	7.39	0.74	171.39
3	204.00	49.20	188.80	10.00	8.65	5.87	8.17	7.98	0.80	199.95
4	245.00	41.66	200.30	10.00	7.52	5.98	7.83	7.66	0.77	184.40
5	143.00	47.69	146.70	10.36	8.26	5.34	7.99	7.70	0.74	186.38
6	157.00	45.51	217.60	10.47	8.24	5.50	8.07	7.80	0.74	191.12
7	154.00	41.60	100.70	10.23	8.88	5.20	8.10	7.79	0.76	190.55
8	230.00	43.00	249.80	10.28	7.58	5.00	7.62	7.30	0.71	167.59
9	240.00	42.84	247.00	9.80	7.26	6.00	7.69	7.53	0.77	178.11
10	220.00	46.42	250.59	9.70	7.00	6.00	7.57	7.41	0.76	172.65
11	195.00	45.98	149.14	10.00	7.24	5.10	7.45	7.17	0.72	161.69
12	206.00	47.38	167.03	10.00	7.69	5.26	7.65	7.40	0.74	171.83
13	158.00	45.86	179.66	8.40	7.48	5.24	7.04	6.91	0.82	149.79
14	200.00	45.00	150.50	10.23	8.40	6.00	8.21	8.02	0.78	202.00
15	179.00	46.00	193.45	10.00	7.34	5.00	7.45	7.16	0.72	161.04
16	165.00	41.31	245.34	11.24	7.55	5.00	7.93	7.51	0.67	177.39
17	146.54	42.57	187.12	11.98	8.11	5.21	8.43	7.97	0.67	199.54
18	211.00	47.21	176.38	10.00	9.10	5.15	8.08	7.77	0.78	189.55
19	142.64	41.66	149.26	10.00	7.59	5.12	7.57	7.30	0.73	167.30
20	205.50	46.64	147.22	10.17	9.34	5.24	8.25	7.93	0.78	197.31
Mean	194.78	44.56	185.64	10.14	7.94	5.40	7.83	7.56	0.75	179.95
SD	36.86	2.53	41.05	0.66	0.66	0.37	0.34	0.31	0.04	14.65
Cov	0.19	0.06	0.22	0.07	0.08	0.07	0.04	0.04	0.05	0.08

Appendix A-2 Machine performance parameter with respect to Feed rate, Moisture content and Rotational speed

Feed rate , kg/h	Moisture content, %	Speed, rpm	Dehusking efficiency, %	Shelling efficiency, %	Total losses, %	Output capacity, kg/h
20	11.23	415	97.84	95.73	5.53	11.08
20	11.23	460	98.27	96.39	5.28	11.64
20	11.23	510	98.79	96.84	4.87	12.21
20	13.07	415	97.52	95.24	5.87	10.62
20	13.07	460	97.99	96.01	5.56	11.26
20	13.07	510	98.37	96.38	5.19	11.85
20	15.36	415	97.11	94.75	6.21	10.07
20	15.36	460	97.61	95.46	5.89	10.71
40	15.36	510	98.02	95.92	5.57	11.41
40	11.23	415	96.82	96.12	5.12	22.79
40	11.23	460	97.34	96.43	4.69	23.64
40	11.23	510	97.86	96.71	4.31	24.06
40	13.07	415	96.42	95.64	5.42	22.37
40	13.07	460	96.88	96.11	5.01	23.19
40	13.07	510	97.36	96.38	4.62	23.76
40	15.36	415	96.1	95.14	5.7	21.82
40	15.36	460	96.47	95.64	5.29	22.67
40	15.36	510	96.91	96.07	4.91	23.41
60	11.23	415	96.15	94.21	6.51	34.98
60	11.23	460	96.57	94.57	6.04	35.79
60	11.23	510	96.94	95.07	5.52	36.14
60	13.07	415	95.86	93.75	6.76	34.42
60	13.07	460	96.32	94.12	6.34	35.27
60	13.07	510	96.65	94.62	5.89	35.79
60	15.36	415	95.53	93.31	7.08	33.91
60	15.36	460	95.96	93.73	6.76	34.71
60	15.36	510	96.31	94.21	6.21	35.38

APPENDIX B

The specification of solar powered maize dehusker cum sheller

Sl. No.	Components/parts	Shape/dimension
1.	Type	Axial flow
2.	Recommended power	0.5 hp DC motor
3.	Type of drive	V belt & pulley
4.	Main crop	Maize
5.	Overall dimensions, mm	1250x720x800
6.	Main frame, mm	1070x 365x 560 Ms angle (35x35x5) & angle (40x40x5)
7.	Shape of frame	Rectangular
8.	Feeding chute ,mm	Trapezoidal shaped 290(top width)x190(bottom width)x 290(height), 50 (depth), Material-MS sheet metal
9.	Main shaft	OD-60mm, ID- 54mm, length-950mm, Material-MS
10.	Main drive belt	V-belt, A-52
11.	Size of pulley	Drive-2.5”dia & driven-7” dia
12.	Recommended speed of main drive	400-535
13.	Dehusking element	Nitrile rubber
14.	Number & type of bearings	4, Ball bearings, size 6204(2nos), 6305(2 nos)
15.	Crop feeding type	Chute feeding type
16.	Height & location of feeding system	780 mm from ground level & placed at RHS of thresher
17.	Main grain outlet	Placed from LHS side to half-length of machine, trapezoidal shaped, 20° of inclination, top width-500mm,bottom width-270mm, height from ground level-300mm
18.	Husk outlet	Placed from RHS side to half-length of machine, trapezoidal shaped, 20° of inclination, top width-460mm,bottom width-310mm, height from ground level-300 mm
19.	Cob outlet	Circular shaped, placed at top cover on LHS side
20.	Prime mover electric capacity, W	370 W
21.	Rated speed, rpm	1500

APPENDIX C

Economics evaluation of mobile solar powered maize dehusker cum sheller

1. **Fixed cost of following items**
    1. Cost of mobile maize dehusker cum sheller(c)
    2. Depreciation rate (Rs/h) = $\frac{C-S}{L\times H}$
    3. Interest rate (Rs/h)= $\frac{C+S}{2} \times \frac{I}{H}$
    4. Insurance & taxes (Rs/h) = Each of 2.5 % of initial cost
    5. Housing (Rs/h) = 1 % of initial cost
    6. Total fixed cost = Depreciation + Interest+ Insurance + Housing
2. **Variable cost**
    1. Electricity cost (Rs/h) = Electricity consumed (kWh) x electricity charges
    2. Operating cost of labour (Rs/h) =Wages of operator / working hours
    3. Repair & maintenance (Rs/h) = 5 % of initial cost
    4. Total variable cost = labour cost + repair & maintenance cost
3. **Total operating cost = Fixed cost + variable cost**

Where,

C = Initial cost of machine, Rs
S = Salvage value, Rs
H = Annual use of machine, h
I = Interest rate, %
L= total life of machine, years

I. Cost economics of mobile unit

1. Operating cost of major parts of mobile unit

Assumptions

Initial cost (C) = 89,521 /-
Life of mobile unit (L) = 10 years
Salvage value (S) = 10% fixed cost
Annual use of machine (H) = 312.5 hrs/yr.
Interest rate (I) = 12.5 % of fixed cost
No. of Labour required = 1

A. Fixed cost

1. Initial cost of major parts of mobile unit = 89,521/-
2. Depreciation rate (Rs/h) $= \frac{C-S}{L\times H}$

$= \frac{89{,}521-8952.1}{10\times 312.5}$

= 25.78

3. Interest rate (Rs/h) $= \frac{C+S}{2} \times \frac{I}{H}$

$= \frac{89,521+8952.1}{2} \times \frac{0.125}{312.5}$

= 19.69

4. Insurance & taxes (Rs/h) = Each of 2.5 % of initial cost

$= \frac{0.05 \times 89,521}{312.5}$

= 14.32

5. Housing (Rs/h) = 1 % of initial cost

$= \frac{0.01 \times 89,521}{312.5}$

= 2.86

Total fixed cost = Depreciation + Interest+ Insurance + Housing

= 25.87+19.69+14.32+2.86

= 62.65 Rs/h

B. Variable cost

1. Electricity cost (Rs/h) = Electricity consumed (kWh) x electricity charges

= 0

2. Operating cost of labour (Rs/h) = $\frac{Wages\ of\ operater, Rs/\ day}{Working\ hours, h/day}$

= 280/8

= 35

3. Repair and maintenance cost (Rs/h) = 5 % of initial cost

$= \frac{0.05 \times 89,521}{312.5}$

=14.32

4. Total variable cost = 0 + 35 +14.32

= 49.32 Rs/h

C. Total operating cost = Fixed cost + Variable cost

= 62.65 + 49.32

= 111.97 Rs/h

2. Operating cost of D.C. Motor of mobile unit

Assumptions

Initial cost (C) = 10,478.4 /-

Life of DC motor (L) = 15 years

Salvage value (S) = 5% fixed cost

Annual use (H) = 1000 hrs/yr.

A. Fixed cost

1. Initial cost of major parts of mobile unit = 10,478.4/-

2. Depreciation rate (Rs/h) $= \frac{C-S}{L \times H}$

$= \frac{10,478.4-523.92}{15 \times 1000}$

= 0.66

B. Variable cost

1. Repair and maintenance cost (Rs/h) = 5 % of initial cost

$$= \frac{0.05 \times 10,478.4}{1000}$$

$$= 0.52$$

C. Total operating cost = Fixed cost + Variable cost

= 0.66 + 0.52

= 1.18 Rs/h

3. Operating cost of solar panels of mobile unit

Assumptions

Initial cost (C) = 20,000 /-

Life of solar panels (L) = 20 years

Salvage value (S) = 5% fixed cost

Annual use (H) = 312.5 hrs/yr.

A. Fixed cost

1. Initial cost of major parts of mobile unit = 20,000/-
2. Depreciation rate (Rs/h) $= \frac{C-S}{L \times H}$

$$= \frac{20,000-1000}{20 \times 312.5}$$

$$= 3.04$$

B. Variable cost

1. Repair and maintenance cost (Rs/h) = 5 % of initial cost

$$= \frac{0.05 \times 20,000}{312.5}$$

$$= 3.2$$

C. Total operating cost = Fixed cost + Variable cost

= 3.04 + 3.2

= 6.24 Rs/h

4. Operating cost of batteries of mobile unit

Assumptions

Initial cost (C) = 28,000 /-

Life of battery (L) = 3 years

Salvage value (S) = 5% fixed cost

Annual use (H) = 312.5 hrs/yr.

A. Fixed cost

1. Initial cost of major parts of mobile unit = 28,000/-

2. Depreciation rate (Rs/h) $= \frac{C-S}{L \times H}$

$$= \frac{28,000-1400}{3 \times 312.5}$$

$$= 28.37$$

B. Variable cost

1. Repair and maintenance cost (Rs/h) = 5 % of initial cost

$$= \frac{0.05 \times 28,000}{312.5}$$

= 4.48

C. Total operating cost = Fixed cost + Variable cost

= 28.37 + 4.48

= 32.85 Rs/h

Total operating cost of mobile unit =

Operating cost of major parts +Operating cost ofD.C. Motor +Operating cost of solar panels +Operating cost of batteries

= 111.97 +1.18+6.24+32.85

= 152.24 Rs/h

II. Cost economics of maize dehusker cum sheller

1. Operating cost of maize dehusker cum sheller

Assumptions

Initial cost (C) =21000 /-

Life (L) = 8 years

Salvage value (S) = 10% fixed cost

Annual use of machine (H) = 2500/8 = 312.5 hrs/yr.

Interest rate (I) = 10 % of fixed cost

A. Fixed cost

1. Initial cost of major parts of mobile unit = 21,000/-

2. Depreciation rate (Rs/h) $= \frac{C-S}{L \times H}$

$$= \frac{21,000-2100}{8 \times 312.5}$$

= 7.56

3. Interest rate (Rs/h) $= \frac{C+S}{2} \times \frac{I}{H}$

$$= \frac{21,000+2100}{2} \times \frac{0.10}{312.5}$$

= 3.696

4. Insurance & taxes (Rs/h) = each of 1 % of initial cost

$$= \frac{0.02 \times 21,000}{312.5}$$

= 1.344

Total fixed cost (Rs/h) = 7.56+3.696+1.344=12.6

B. Variable cost

1. Repair and maintenance cost (Rs/h) = 5 % of initial cost

$$= \frac{0.05 \times 21,000}{312.5}$$

=3.36

2. Operating cost of labour (Rs/h) = only one labour is required for operating of mobile unit & machine so operating cost of labour is same for operating of mobile unit and machine.

C. Total operating cost = Fixed cost + Variable cost

= 12.6 + 3.36
= 15.96 Rs/h

2. Operating cost of DC motor of maize dehusker cum sheller

Assumptions

Initial cost (C) = 9000 /-
Life of DC motor (L) = 15 years
Salvage value (S) = 5% fixed cost
Annual use of machine (H) = 15000/15= 1000 hrs/yr.

A.Fixed cost

1. Initial cost of major parts of mobile unit = 9000/-
2. Depreciation rate (Rs/h) $= \frac{C-S}{L \times H}$

$$= \frac{9000-450}{15 \times 1000}$$

= 0.57

B .Variable cost

2. Repair and maintenance cost (Rs/h) = 5 % of initial cost

$$= \frac{0.05 \times 9000}{1000}$$

=0.45

C. Total operating cost = Fixed cost + Variable cost

= 0.57 + 0.45
= 1.02 Rs/h

Total operating cost of maize dehusker cum sheller (Rs/h) =

Operating cost of maize dehusker cum sheller +Operating cost of D.C. Motor

= 15.96+1.02 = 16.98 Rs/h

Total operating cost of mobile maize dehusker cum sheller (Rs/h) =

= Total operating cost of mobile unit + Total operating cost of maize dehusker cum sheller

= 152.24 + 16.98 = 169.22 Rs/h = 169.22/36.14 = 4.68 Rs/kg = 468 Rs/q