STUDIES ON EXTRACTION OF SINDOOR FROM ANNATTO SEEDS (*Bixa orellana*)

M.Tech. (Agril. Engg.) Thesis

by

Jyoti Patel

DEPARTMENT OF AGRICULTURAL PROCESSING AND FOOD ENGINEERING
SV COLLEGE OF AGRICULTURAL ENGINEERING AND TECHNOLOGY & RESEARCH STATION,
FACULTY OF AGRICULTURAL ENGINEERING
INDIRA GANDHI KRISHI VISHWAVIDYALAYA,
RAIPUR (Chhattisgarh)
2019

STUDIES ON EXTRACTION OF SINDOOR FROM ANNATTO SEEDS (*Bixa orellana*)

Thesis

Submitted to the

Indira Gandhi Krishi Vishwavidyalaya, Raipur

by

Jyoti Patel

IN PARTIAL FULFILMENT OF THE REQUIREMENTS FOR THE DEGREE OF

Master of Technology

In

Agricultural Engineering

(Agricultural Processing and Food Engineering)

Roll No.220117005 **ID No.20171827615**

JULY, 2019

CERTIFICATE - I

This is to certify that the thesis entitled **"Studies on extraction of sindoor from annatto seeds (*Bixa orellana*)"** submitted in partial fulfillment of the requirements for the degree of **Master of Technology in Agricultural Engineering** of the Indira Gandhi Krishi Vishwavidyalaya, Raipur, is a record of the bonafide research work carried out by **Jyoti Patel** under my guidance and supervision. The subject of the thesis has been approved by the Student's Advisory Committee and the Director of Instructions.

No part of the thesis has been submitted for any other degree or diploma or Certificate Course. All the assistance and help received during the course of the investigations have been duly acknowledged.

Date : 19.07.19

Chairman 19.07.19

THESIS APPROVED BY THE STUDENT'S ADVISORY COMMITTEE

Chairman (Dr. D. Khokhar) _____ 19.07.19

Member (Dr. S. Patel) _____ 19/7/19

Member (Dr. RavindraSoni) _____

Member (Dr. R.R. Saxena) _____

Member (Er. A. Kalne) _____

CERTIFICATE - II

This is to certify that the thesis entitled "**Studies on extraction of sindoor from annatto seeds (*Bixa orellana*)**" submitted by **Jyoti Patel** to the Indira Gandhi Krishi Vishwavidyalaya, Raipur, in partial fulfillment of the requirements for the degree of **Master of Technology in Agricultural Engineering** in the Department of Agricultural Processing and Food Engineering has been approved by the external examiner and Student's Advisory Committee after oral examination.

Signature External Examiner

(Name Dr. P.H. Bakane)

Date: 22/09/19

Major Advisor _____

Head of the Department _____ 22/9/19

Faculty Dean _____

Approved/Not approved

Director of Instructions _____

ACKNOWLEDGEMENT

First and foremost among those whom we wish to gratefully acknowledge is the almighty God, who provided us vision and strength to complete this research project.

I feel great pleasure in expressing our sincere and deep sense of gratitude to my esteemed professor Dr. D. Khokhar, I.G.K.V., Raipur, for his valuable, inspiring, constructive criticism, and ceaseless encouragement provided during the entire project work.

Most humbly and respectfully I wish to express my profound sense of gratitude to Dr. S. Patel, Dean and HOD of Agricultural Processing and food engineering, S.V. College of Agricultural Engineering and Technology & Research Station, Faculty of Agricultural Engineering, I.G.K.V., Raipur, for his untiring help, valuable suggestions and keen interest in my work and for providing necessary facilities during the course of my research work.

With a great reverence, I express my sincere thanks to respected members of my advisory committee Dr. S. Patel, Dr. Ravindra Soni, Dr. R. R. Saxena and Er. A. Kalne College of agriculture, Raipur for their useful suggestions, critical comments and kind help rendered as and when needed and I extend cordial thanks to my teachers Er. Neeraj Mishra and Er. P. S. Pisalkar, for their timely co-operation during the course of study.

I would like to duly acknowledge Dr S. K. Patil, Hon'ble vice chancellor, Dr. R. K. Bajpai, Director Research Services and Dr. M. P. Thakur, Director of Instructions, IGKV, Raipur for their administrative and technical help which facilitated our research work.

I am highly grateful to Dr. R. K. Naik and Dr. V. M. Victor Assistant Professor, Department of Farm Machinery and Power for providing all necessary help during experiments even at odd hours.

I express thankful to Department of Plant Physiology, Agriculture Biochemistry, Medicinal and Aromatic Plants, IGKV, Raipur for providing necessary facility for the completion of my research. I am extremely thankful to all

the faculty members of the Faculty of Agricultural Engineering, Ph.D. Scholars, R.A. and S.R.F. for their time to time help rendered during the course of study.

We have immense pleasure in expressing my whole hearted sense of appreciation to my seniors Er. Pooja Sahu, Er. Aditya Sirmour, Dr. Rahul sharma for their cooperation, valuable suggestion and help rendered by them which greatly enriches the present piece of work and molded in the shape of this project.

I am also thankful to my friends Er. Rashmi Thakur, Er. Purvi Tiwari, Er. Konda Gauthami, Er. Rajiv Kurrey, Mukesh Patel and all other friend and juniors Jyoti Maravi and Laxmi Verma for their support during research work.

I also thankful to Mr. Premanand sahu, Mr. Sharad sahu and all other technical assistant of the Faculty of Agricultural Engineering for their kind support and help during entire study.

Last but not the least, there aren't enough words to express my gratitude to my beloved parents, Mr. Dhanee Ram Patel and Mrs. Ramkunwar Patel my Brother, Sachin Patel and Sister Jayanti Patel for their constant moral support, encouragement, sincere prayers, expectation and blessing which have always been the most vital source of inspiration and motivation in life.

Jyoti

Jyoti Patel

Place: Raipur

Date: 19/07/2019

TABLE OF CONTENTS

Chapter	Title	Page
	ACKNOWLEDGEMENT	**i**
	TABLE OF CONTENTS	**iii**
	LIST OF TABLES	**vii**
	LIST OF FIGURES	**viii**
	LIST OF NOTATIONS/SYMBOLS	**ix**
	LIST OF ABBREVIATIONS	**x**
	ABSTRACT	**xi**
I	**INTRODUCTION**	1-3
II	**REVIEW OF LITERATURE**	4-19
	2.1 Physicochemical property of annatto seeds	4
	2.1.1 Physical Property	4
	2.1.2 Chemical Property	6
	2.2 Uses of annatto seeds and extract	8
	2.3 Extraction of sindoor from annatto seeds	10
	2.4 Phytochemical analysis of annatto seed	13
	2.5 Design of machine	17
III	**MATERIALS AND METHODS**	20-41
	3.1 Plant material	20
	3.2 Physical characteristics	20
	3.2.1 Size	22
	3.2.2 Shape	22
	3.2.3 Geometric Mean Diameter	22
	3.2.4 Sphericity	22
	3.2.5 Bulk density	22
	3.2.6 True density	22
	3.2.7 Porosity	23
	3.2.8 Thousand seeds volume cm^3 (Test Volume)	23

	3.2.9	Angle of Repose	23
	3.2.10	Coefficient of friction	24
		3.2.10.1 Coefficient of static friction	24
		3.2.10.2 Coefficient of Kinetic Friction	24
3.3	Chemical composition		26
	3.3.1	Moisture Content	26
	3.3.2	Fat content	26
	3.3.3	Ash content	27
	3.3.4	Crude fiber content	27
	3.3.5	Protein Content	27
	3.3.6	Total Carbohydrate	28
3.4	Extraction of annatto pigments		28
	3.4.1	Extraction method	28
	3.4.2	Determination of overall yield	29
3.5	Qualitative Phytochemical Screening of sindoor		29
	3.5.1	Test for Alkaloids	30
	3.5.2	Test for Terpenoids	30
	3.5.3	Test for Saponins	30
	3.5.4	Test for Carbohydrates	30
	3.5.5	Test for Cardiac glycoside	30
	3.5.6	Test for Phenol	31
	3.5.7	Test for Flavonoids	31
	3.5.8	Test for Tannin	31
3.6	Quantitative Determination of Phytochemicals		31
	3.6.1	Seed Extracts Preparation	31
	3.6.2	Quantitative Estimation of Phenoilc Compounds	31
		3.6.2.1 Extract preparation	31
		3.6.2.2 Preparation of standard solution	31
		3.6.2.3 Estimation of phenolic compounds	32
	3.6.3	Quantitative Estimation of saponin Compounds	32
	3.6.4	Quantitative estimation of total flavonoid	32
		3.6.4.1 Preparation of standard solution	33
		3.6.4.2 Estimation of total flavonoid	33
3.7	Conceptual design of extraction machine		34

		3.7.1	Design consideration	34
		3.7.2	Principle of operation	34
		3.7.3	Machine Description	34
		3.7.4	Material Selection and Components Used	35
		3.7.5	Description of various parts of the machine	35
		3.7.5.1	The Feed Hopper	35
		3.7.5.2	The Main frame	36
		3.7.5.3	Outer Cylindrical Chamber	36
		3.7.5.4	The Extracting Chamber	36
		3.7.5.4.1	Inner cylinder	36
		3.7.5.4.2	Shaft	36
		3.7.5.5	Bearing	36
		3.7.5.6	Motor	36
		3.7.5.7	Outlet	37
		3.7.6	Designing of machine components	37
		3.7.6.1	Size of feed hopper	37
		3.7.6.2	Selection of electric motor	38
		3.7.6.3	Design of pulley size	38
		3.7.6.4	Length of the belt	38
		3.7.6.5	Diameter of the shaft	40
IV	**RESULTS AND DISCUSSION**			42-56
	4.1		Physico-chemical properties	42
		4.1.1	Physical characteristics	42
		4.1.2	Proximate analysis of annatto seeds	43
	4.2		Extraction of pigment from annatto seed	44
	4.3		Qualitative phytochemical of screening of different extract	45
	4.4		Quantitative determination of phytochemical constituents	46
		4.4.1	Quantitative determination of total phenolic contents	47
		4.4.2	Quantitative determination of total flavonoid contents	48
		4.4.3	Quantitative determination of total saponin content	49

	4.5	Statistical analysis		50
	4.6	Conceptual design of machine for extraction of annatto seeds		51
		4.6.1	Dimension of inner and outer cylinder	51
		4.6.2	Design of hopper size	52
		4.6.3	Design calculation	52
			4.6.3.1 Design of pulley size	53
			4.6.3.2 Length of the belt	53
			4.6.3.3 Power requirement	53
			4.6.3.4 Design for diameter of horizontal shaft	54
V	**SUMMARY AND CONCLUSION**			57-59
	REFERENCES			60-67
		APPENDIX-A		68
		APPENDIX-B		70
		APPENDIX-C		71
	RESUME			72

LIST OF TABLES

Table	Title	Page
3.1	The different medium used for extraction	28
3.2	ASME code for shaft design	41
4.1	Physical property of annatto seeds	42
4.2	Frictional property of annatto seeds	43
4.3	Chemical composition of annatto seed	44
4.4	Result of pigment extracted from seed by using different solvent	44
4.5	Phytochemical test of different extract	46
4.6	Total saponin content in different extract	50
4.7	Statistical analysis	51
4.8	Specification of pulley	53
4.9	Specification of Belt	53
4.10	Description of various lode	53
4.11	Design calculation of shaft	54
4.12	Approximate dimension of extraction machine	54

LIST OF FIGURES

Figure	Title	Page
3.1	Digital Venire Callipers	21
3.2	Weighing balance	21
3.3	Angle of repose measurement	21
3.4	Centrifuge	21
3.5	Coefficient of static friction measurement	21
3.6	Coefficient of kinetic friction measurement	21
3.7	Hot Air Oven	25
3.8	SOCS PLUS	25
3.9	Fibra Plus	25
3.10	Muffle furnace	25
3.11	UV- VIS Spectrophotometer 117	25
3.12	Distillation chamber for crude protine analysis	25
3.13	Extraction Process	29
3.14	Solvent Evaporation	29
3.15	Extracted Pigment	29
3.16	Dried Sindoor	29
3.17	Standard curve for different concentrations of Gallic acid for phenol estimation	32
3.18	Calibration curve for different concentrations of qurecetin for flavonoid estimation	33
3.19	Different Section of Hopper	37
4.1	Effect of medium on Total Phenolic Content	47
4.2	Effect of extraction medium on Total Flavonoid Contentss	48
4.3	Effect of extraction medium on saponon Content	49
4.4	Hopper dimension	52
4.5	AUTO CAD designing of annatto seed extraction machine	55
4.6	Isometric View of the annatto seed extraction machine	56

LIST OF NOTATIONS/SYMBOLS

Symbol	Description
Mm	Millimeter
µg	Microgram
Mg	Milligram
et, al.	and others
Fig.	Figures
G	Gram
H	Hours
i.e.g	that is
g/min	Gram per minute
viz.	*videlicet* (namely)
Wb	wet basis (Moisture Content)
Db	dry basis(Moisture content)
Wt	Weight
%	Percent
&	And
°	Degree
^{0} C	degree Celsius
Nm	Nanometer

LIST OF ABBREVIATION

Abbreviation	Description
Agri.	Agriculture
Agil. Engg	Agricultural Engineering
Avg	Average
C.G.	Chhattisgarh
Com	Compression
CV	Coefficient of Variation
dia.	Diameter
Dept.	Department
Dev.	Deviation
Engg.	Engineering
et al.	Et alibi
Etc	Etcetera
FAE	Faculty of Agricultural Engineering
Fig.	Figure
Govt.	Government
H	Hour
ICAR	Indian Council of Agricultural Research
IGKV	Indira Gandhi Krishi Vishwavidyalaya
Intl.	International
Manfg	Manufacturing
M.Tech.	Master of Technology
min.	Minute
Pub.	Published
SD	Standard Deviation

THESIS ABSTRACT

a) Title of Thesis	:	Studies on Extraction of Sindoor from Annatto Seeds (*Bixa orellana*)
b) Full name of the student	:	Jyoti Patel
c) Major Subject	:	Agricultural Processing and Food Engineering
d) Name and address of the Major Advisor	:	Dr. D. Khokhar Indira Gandhi Krishi Vishwavidyalaya, Raipur (C. G.)
e) Degree to be Awarded	:	Master of Technology in Agricultural Engineering

Jyoti
Signature of the Student

Dharmendra 19.07.19
Signature of Major Advisor

Date: 19/07/2019

Signature of Head of the Department
19/7/19

ABSTRACT

The *Bixa orellana* is small perennial tree belong to family Bixaceae. Trees are available in various localities along with forest of Chhattisgarh state. It is primarily important for their reddish-orange color which is extracted from seeds. Different traditional methods for extraction such as maceration are very time-consuming and recovery in powder form from water extract requires higher energy. To overcome the issues the present research work was focused on to study the different physico-chemical parameter in view to propose a suitable conceptual bixin powder extraction machine of small capacity, which can be used at village level or at farm level. For this study the physical and mechanical properties of seeds was determined in view to design machine. Experiments were also conducted using various extraction medium (acetone, ethanol, chloroform, hexane

and vegetable oil) to find out suitability of the extraction medium. Qualitative and quantitative estimation of biologically active compounds were also performed for the extracted powder. In background of the above information a small extraction machine has been designed.

The length width and thickness of bixa seed was in the range of 4.18 mm, 2.98 mm and 2.18 mm. The bulk density, true density and porosity of seed range from 695.86 - 706.38 kg/m^3, 1347.7 - 1351.8 kg/m^3 and 47.74 - 48.51 kg/m^3. The angle of repose was 43.87 - 47.12^o. The maximum coefficient of friction was obtained in rubber sheet (0.38 - 0.4).

Bixa seed contain 10.15 % protein, 3.73 % fat, 4.13 % ash, 33.84% fiber content and 44.98 % total carbohydrate at 4.45 %.moisture content.

In different extract medium, maximum yield obtained with water (8.077%) followed by acetone (7.1%). In qualitative analysis of biologically active component in the extract, positive observations were recorded for phenol, flavonoid, tannin, terpenoids and carbohydrates in all extract. In different extract medium, maximum phenolic content obtained with water (808.23 mg (GAE)/100 gm of extract). The maximum flavonoid and saponin content obtained with acetone 15.17g qurecetin/100g and 4.95% respectively.

For the extraction of sindoor from annatto seed at local level by the grower, producer or collector, mechanical process or machine are not available. Therefore, conceptual design is proposed for a batch type extraction machine having capacity of 5.0 kg/batch of annatto seed with following dimensions.

The extraction machine consists of hopper, extraction chamber, frame, electric motor and stand. The extraction chamber consists of two cylinders (inner and outer cylinder). The outer cylinder filled with solvent such that annatto seeds in the inner perforated cylinder should be submerged in the solvent which facilities the extraction of bixin by loosing/dissolving it from seed. The rotating shaft has nylon brush which brushes the submerged annatto seeds in the inner cylinder. The bixin coat of the seeds brushed continuously by the rotating brush and gets dissolved in the solvent. The solvent containing bixin should be collected from the opening provided at the bottom of outer cylinder in the front. The machine should be operated with 1 hp electric motor.

परियोजना सारांश

अ)	परियोजना प्रतिवेदन का शीर्षक	:	अन्नाट्टो बीज (बिक्सा ओरेलाना) से सिंदूर निकालने का अध्ययन
ब)	छात्रा का पूर्ण नाम	:	ज्योति पटेल
स)	मुख्य विषय	:	कृषि प्रसंस्करण और खाद्य अभियांत्रिकी
द)	मुख्य सलाहकार का नाम	:	डॉ. डी. खोखर वैज्ञानिक, इंदिरा गांधी कृषि विश्वविद्यालय रायपुर (छ.ग.)
इ)	प्रदान की जाने वाली उपाधि	:	कृषि अभियांत्रिकी में मास्टर ऑफ टेक्नोलॉजी

Jyoti
छात्रा का हस्ताक्षर

Dkhamkhar
प्रमुख सलाहकार का हस्ताक्षर

दिनाँक : 19.07.19

19/7/19
विभाग के प्रमुख का हस्ताक्षर

सारांश

बिक्सा ओरेलान छोटा बारहमासी पेड है जो बिक्सेजिआई परिवार से सबंधित हैं। इसके पेड छत्तीसगढ़ राज्य के विभिन्न इलाको में उपलब्ध है। यह मुख्य रूप से उनके लाल नारंगी रंग के लिये महत्वपूर्ण है, जो बीज से निकाला जाता है। निष्कर्षण के लिये अलग–अलग पारंपरिक तरीके जैसे कि घोलना बहुत समय लेने वाला होता है और पानी के अर्क से पाउडर के रूप में पुर्नप्राप्ति के लिये उच्च ऊर्जा की आवश्यकता होती हैं, उन कमियों को दूर करने के लिये एंव वर्तमान अनुसंधान कार्य को दृष्टिगत रखते हुए भौतिक, रासायनिक मापदण्डों के अध्ययन पर ध्यान केन्द्रित किया गया ताकि कम क्षमता वाले उपयुक्त वैचारिक बिक्सिन पाउडर निष्कर्षण मशीन का प्रस्ताव किया जा सके, जिसका उपयोग लघु एवं कुटीर उद्योग में किया जा सके। इस अध्ययन के लिये मशीन डिजाइन को ध्यान में रखते हुए बीजों के भौतिक और यांत्रिक गुणों का निर्धारण किया गया था। निष्कर्षण माध्यम की उपयुक्तता का पता लगाने के लिये विभिन्न निष्कर्षण माध्यम (एसीटोन, एथेनॉल, क्लोरोफार्म, ऐक्सेन और वनस्पति तेल) का उपयोग करके भी प्रयोग किया गया। निकाले गये पाउडर के लिये जैविक रूप से सक्रिय यौगिकों के गुणात्मक और मात्रात्मक आंकलन भी किए गये थे। उपरोक्त जानकारी की पृष्ठभूमि में एक छोटी निष्कर्षण मशीन तैयार की गई है।

बिक्सा बीज की लम्बाई, चौड़ाई और मोटाई क्रमशः 4.18 मिमी, 2.98 मिमी और 2.18 मिमी थी। 695.86–706.38 किग्रा/मीटर^3, 1347.7–1351.8 किग्रा/मीटर^3 और 47.74–48.57 किग्रा/मीटर^3 से बीज घनत्व, वास्तविक घनत्व और बीज की सीमा क्रमशः एंगल आफ रिपोज़ 43.87–47.12 था। घर्षण का अधिकतम गुणांक रबर शीट (0.38–0.4) में प्राप्त किया गया था।

बिक्सा के बीज में 10.15% प्रोटीन, 3.73% वसा, 4.13% 33.84% फाइबर और 4.98% कुल कार्बोहाइड्रेट था। इस दौरान बीज में नमी की मात्रा 4.45% थी।

विभिन्न अर्क माध्यमों में पानी के साथ (8.077%) तथा एसीटोन के साथ (7.1%) प्राप्त हुई हैं। अर्क में जैविक रूप से सक्रिय घटक के गुणात्मक विश्लेषण में सभी अर्क के फिनोल, फ्लेवोनोइड, टैनिन, टेरपेनोइड और कार्बोहाइड्रेट के लिये सकारात्मक अवलोकनों को दर्ज किया गया था। विभिन्न अर्क माध्यमों में पानी के साथ प्राप्त अधिकतम फेनोलिक यौगिक (808.23) मिलीग्राम (जी.ए.ई/100 ग्राम अर्क) प्राप्त हुआ। अधिकतम फ्लोवोनोईड और सैपोनिन यौगिक क्रमशः एसीटोन 15.17 ग्राम क्येरेसिटिन / 100 ग्राम और 4.95% के साथ प्राप्त हुआ।

उत्पादकों, निर्माताओं द्वारा स्थानीय स्तर पर अनाटो बीज से सिंदूर की निकासी के लिये यांत्रिक प्रकिया या मशीन उपलब्ध नहीं है। इसलिए, संकलनात्मक डिजाइन (बैच प्रकार) निष्कर्षण मशीन के प्रस्तावित किया गया है जिसमें निम्न आयामों के साथ 5.0 किग्रा / बैच बीज की क्षमता है।

निष्कर्षण मशीन में हॉपर, निष्कर्षण कक्ष, फ्रेम, इलेक्ट्रिक मोटर और स्टैण्ड शामिल हैं। निष्कर्षण कक्ष में दो सिलेंडर (आंतरिक और बाहरी सिलेंडर) होते हैं। विलायक से भरे बाहरी सिलेंडर में आन्तरिक छिद्रित सिलेंडर जिसमें एनाटो बीज है जो कि विलायक से डूबा होना चाहिए, जो बीज से ब्रिक्सिन के निष्कर्षण की सुविधा प्रदान करता है। घूमने वाले शाफ्ट में नॉयलॉन ब्रश होता है जो आंतरिक सिलेंडर में जलमग्न एनाटो बीज को ब्रश करता है। बीजों का ब्रिक्सिन कोट घूर्णन ब्रश द्वारा लगातार ब्रश किया जाता है जिससे ब्रिक्सिन विलायक में घुल जाता है। ब्रिक्सिन युक्त विलायक को सामने के बाहरी सिलेंडर के नीचे दिए गए निकासी द्वारा से एकत्र किया जाये। मशीन को 1 एच.पी. इलेक्ट्रिक मोटर के साथ संचालित किया जाना चाहिए।

CHAPTER- I

INTRODUCTION

The *Bixa orellana* is a shrub or small perennial tree, belongs to family Bixaceae and the genus Bixa, originally from tropical America. From Mexico to Ecuador, Brazil, Paraguay, Colombia, Dominican Republic, Haiti, Trinidad, Mexico, Panama and Bolivia the largest quantities annatto is found.

According to FAO, the range of annatto seeds production in worldwide is 10,000-11,000 tons per annum. Majority of the mass is from Africa and Latin America. Consumption of annatto seeds to be 10,650 tons in 1992 in world, estimated by International Trade Centre. The principal consumers are Latin America (14%), Japan (18%), Western Europe (25%) and USA (32%). In India agro-climatic conditions, *B. orellana* has become naturalized in wide range and the production of seeds, annatto is now cultivated in the states of Kerala, Tamil Nadu, Karnataka, Andhra Pradesh, Orissa, Madhya Pradesh and Maharashtra, along with East Africa, Indonesia, Shrilanka (Anon 1988). This indicates that in world market India has capabilities to contribute significantly of annatto seeds.

It is commonly known by a number of names. It is most frequently called "annatto" or ‘achiote’ in North America. ‘Changuarica’, ‘Ku-zeb’ and ‘Pumaceua’ in Mexico, ‘annatto’ and ‘Urucu’ in Brazil. ‘uruceni’ in Germany, ‘roucou’ in Donlinica arid French Westnidies. ‘achiot’ in columbia. ‘aronotto’ in Amerindian and also commonly known as lipstick tree, Raktabija and Shambu (Little et al., 1974), Sinduri (Sanskrit) Sinduriya, Latkan (Hindi), Rangmale (Kannada), Sappira virai,,Uragumanjal (Tamil).

In mountainous regions or higher elevation area and in lowland area, *B. orellana* grows equally well (Bruggeman, 1957). All the naturally growing annatto shrubs are found in neglected or abandoned farmland and grown up to early secondary forest (PIER, 2015). Annatto is a small tree, attains about 3-4 m height.

Its leaves are pointed tip, round, heart shaped base and evergreen in every season with glossy ovate lamina. Many pink or white flowers are on the tip of the branch ends in terminal panicles. Pre-maturing fruits are globose or ovoid or heart shaped capsules which may be green or red when unripe turning brown on maturing and found in bunches. Dense rough or soft bristles cover the capsules. A number of small, fleshy seeds of about 5mm in diameter remain in the capsule. The outer seed coat is reddish-orange in color and pulpy in nature, which is the source of the dye.

B. orellana is firstly important for the reddish-orange dye obtained from the seeds, which have fleshy test and commercially known as annatto. For coloring the food, especially dairy product, butter, cheese, rice, margarine, soups, etc., and for coloring cosmetics, varnishes and oils, not only in food products but also in paint and textile industries, a carotenoid pigment known as bixin is used, which is present in annatto seeds. Another interesting fact is that 70% of all natural coloring agents consumed worldwide are derived from annatto.

In foods the application of natural dyes will rise in the near future with greater consumer awareness and increasing legislative restrictions on the use of synthetic dye stuffs. Nowadays, public concern about the safety of synthetic colorants is increased; therefore, natural pigments attract more attention, which can be served as a functional component besides creating desirable colour in food products **(Zhang *et al.*, 2013)**.

Various carotenoid pigments, found in the reddish waxy coating of the seeds mainly bixin and norbixin, develop annatto color. 4.5–5.5% pigments contains in the pericarp of their seeds, in which bixin accounting to 70–80% of these pigments (Preston *et al.*, 1980; Mercadante *et al.*, 2002).

Some processes are applied to obtain annatto extract. The pigments in annatto seeds can be extracted by mechanical processes through grinding the seeds and by physical-chemical methods using solvents or enzymes. Three main commercial processes are used to extract the pigment from dried annatto seeds. These are (i) direct extraction into oil, (ii) direct extraction into aqueous alkali, or (iii) indirect extraction with solvents **(Preston and Rickard, 1980).**

In the indirect extraction of annatto, the pigments are extracted from the seeds with solvent, which is subsequently removed. The solvent-extracted pigment may be used as a dry powder, milled with vegetable oil to produce a suspension, or hydrolyzed in aqueous alkali to produce a solution of norbixinate **(Scotter *et al.*, 1998)**.

Traditional methods of color extraction such as maceration are very time-consuming and recovery in powder form from solvent require much energy and time. Pigment extraction using water as solvent is susceptible for the fungal growth. Traditional method also involve several processing steps, require high energy and is labor intensive. To overcome the issues related to traditional method, this research work is being focused on the development of small capacity extraction machine which can be used at local level by the grower/ producer at farm level to extract the pigment from bixa seed which, normally not being collected or used.

In particular, this work "**Studies on Extraction of Sindoor from Annatto Seeds (*Bixa orellana*)"** focuses to propose a machine design for extraction of sindoor powder from the annatto seed. The specific objectives of the study were as under:-

1.) To study the physico-chemical properties of annatto seeds.
2.) To study the effect of extraction medium on recovery of annatto powder (sindoor).
3.) To propose a design system (theoretically) for extraction of annatto powder.

CHAPTER – II

REVIEW OF LITERATURE

This chapter deals with brief review of relevant literature pertaining to this topic was scanty, in these review various parameter involved. The review covers the general information regarding physical and chemical properties of annatto seed, and various extraction method used to extract sindoor and there phytochemical study. Research work conducted by different researchers is reviewed as under.

2.1 Physicochemical property of annatto seeds

2.1.1 Physical Property

Math *et al*. (2015) studied for design of any machine, different physical and engineering property of annatto pods and seeds were determined. The densities were 135-186 kg-m^{-3}, 1206-1254 kg-m^{-3}, 317-381.5 kg-m^{-3} for pod, seed, and husk respectively. The moisture content was determined for seeds: 18.9 – 20 % (dry basis) and pod 8 - 10 % (dry basis). Bixin content in the annatto seed was in the range 1.35 - 1.77 percent. The Angle of repose for pod, seed, and husk lies between 30.15 - 35.76 degree.

Niveditha *et al*. (2013) conducted a study in coastal area of Southwest India to study the physical and mechanical properties of *Canavalia*.

Physical parameter	Seed	Kernels
Bulk density	479 - 534 kg/m^3	417.4 - 481.1 kg/m^3
True density	834.5 - 955 kg/m^3	1007.6 - 1315.3 kg/m^3
Porosity	40 - 45%	57 - 58%

It is observed that the kernels have lower estimations of sphericity than seeds. The angle of repose of *Canavalia* is 24.8-26.2° which is higher for kernels than seeds i.e. 21.4-22.9°. Seeds and kernels both indicated least static coefficient

of friction in stainless steel i.e. 0.25-0.48 and most extreme on glass i.e. 0.33-0.85. All the geometric parameters except angle of repose were significantly higher in seeds of *C. cathartica* than *C. maritima*. In perspective on significance of *Canavalia* seeds, impact of moisture, cooking, roasting and germination on the physical and mechanical properties requires future insight.

Balasubramanian *et al*. (2012) studied on black pepper, the physical and mechanical properties were determined. The moisture content in the range of 3.3 - 18% (dry basis). Some dimension of seeds were increased with moisture content

Axial dimension :	Major	4.93 - 5.37 mm
	Medium	4.6 - 5.08 mm
	Minor	4.42 - 4.89 mm

The different physical property may also increase linearty with moisture content :

Thousand seed weight	42.82 - 56.04 g
Geometric mean diameter	4.64 - 5.10 mm
Unit volume	53.06 - 70.35 mm^3
Surface area	67.65 - 81.87 mm^2
True density	987.69 - 1012.19 $kg\text{-}m^{-3}$
Bulk density	556.8 - 542.7 $kg\text{-}m^{-3}$

The true density increased linearly while the bulk density decreased linearly and the porosity also be change with moisture content. The mechanical property such as angle of repose, coefficient of friction increased linearly from 22.30° to 33.65° and 0.705 to 0.97, change with moisture content. The maximum coefficient of friction may be obtained in plywood. At rupture point the force and energy absorbed were decreased non-linearly from 74.6 - 50.1 Newton and 42.9 - 32.8 kilo Jule while the deformation increased non-linearly from 0.575 - 0.650 mm with increase in moisture content.

Tunde-Akintunde *et al*., (2004) designed the equipment for improving the processing of sesame seed (Sesamum indicum L.) to resolve some of the physical

properties. The moisture content of seeds is 3.5% wet basis. The average dimensions of sesame seed viz, length 2.80 mm, width is 1.7 mm and thickness is 0.83 mm. The average geometric mean diameter is 1.56 mm, sphericity is 0.56, surface area and density were, 7.80 mm^2 and 1224 kg/m^3 . The coefficient of friction on glass is 0.39 lower to 0.55 on plywood, even as the angle of repose was 32.0^0.

2.1.2 Chemical Property

Seeds are the storehouse of many chemical components including nutrients, phytochemicals and non-nutritive functional constituents.

Talpade *et al*. (2018) determined physicochemical and mineral composition of gardencress seed and black gram split. The different physicochemical and mineral properties of gardencress seed viz, moisture, protein, carbohydrates, fat, ash and minerals (Ca, K,Fe) were determined. Result obtained for proximate composition of gardeneress seed revealed that moisture content was 4.7%, protein 19.68%, carbohydrates 35.28%, fat 27.12%, ash 4.7% and crude fiber 6.8%. Mineral composition shown that the highest amount of iron 7.4, calcium 270 and potassium 780 (mg/100g) respectively. Similarly, black gram split reported moisture content was 10.7%, protein 23.7%, carbohydrates 57.06%, fat 1.5%, ash 3.3% and crude fiber 0.7% and minerals like iron 3.7, calcium content was 138 and phosphorus 370 (mg/100g). gardencress seed is rich source of proteins, dietary fiber and various essential minerals such as potassium. Black gram split is good source of proteins, carbohydrates, calcium and iron. The nutritional value of gardencress seed and black gram split can have better suitability in value addition of food products.

Dike *et al.* (2016) studied the phytochemical and proximate evaluation of the foliage and seed of *Bixa orellana* for useful bioactive contents. Phytochemicals and crude contents profiles from aqueous and ethanolic extracts of the plant showed tannins, flavonoids, terpenoids, glycosides, alkaloids, steroids, phenols and saponins. Quantitatively, 21.89 g, flavonoids; 31.86 g, glycosides; 11.11 tannins; 121.89 phenols was recorded for the leaf and 8.86 g, flavonoids; 93.22 g, glycosides; 44.79 tannins; 82.99 phenols and 10.11 g, saponins for seed. Proximate analysis showed 6.13 ± 0.05 %, moisture; 4.5 ± 0.36 %, ash; 10.40 ± 0.25 %, crude

fats; 52.80 ± 0.5 %, crude fibre; 4.24 ± 0.02 %, protein and 21.85 ± 0.00 % carbohydrate for leaf and 4.89 ± 0.19 %, moisture; 5.62 ± 0.12 %, ash; 7.20 ± 0.07 % , crude fats; 53.31 ± 0.07 %, crude fibre; 12.55 ± 0.28 %, protein and 16.26 ± 0.39 %, carbohydrate content for seed. The high amount of phenolic compounds recorded indicates that *Bixa orellana* possess high antioxidant, anticarcinogenic and antimalarial potentials. The leaves showed significantly higher moisture, flavonoids, phenols and saponins content; hence to ensure sustainable management of the plant resources, the leaves should be the primary target of any phytochemicals extraction activities for B. orellana.

Telrandhe *et al*. (2016) studied that annatto is mainly used as a natural color for its bright red fruit (seedpods) and hence it's common name "Lipstick tree". The present study is related to pharmacognostical and phytochemical account of Bixa orellana seeds. it helps to differentiate from the closely related other species of Bixa orellana, Linn by providing useful information. The unique red color to annatto is because of Carotenoids (bixin and norbixin). Present work was completed to decide its macro morphological, and chemo-micromorphological profiles. Quantitative estimation of Phyto constituents of *Bixa orellana seeds* contains Fat 5.48%, Protein 7.22%, Carbohydrate 8.53% and Total flavanoids 6.5%.

Valerio *et al*. (2015) evaluate the biological quality of that annatto seed residue arising from annatto seed processing, in these seed high levels of protein, carbohydrates, fiber and minerals are present. The different method might be used to quantify the, general composition, amino acid composition, protein quality, mineral levels, and antinutritional factors. The different chemical composition were obtained that 6.75% moisture, 11.5% protein, 42.20% total carbohydrates, 5.23% ash, 2.21% lipids, and 28.44% fiber. From these analysis, it proved that the seed residue may be used as food, which is rich in fiber and also a protein source. Antinutritional components were not distinguished. The protine quality obtained from the seed recidue same to the isolated protein. The outcomes indicated that in a human diet, annatto seed residue were utilized, further studies are needed to prove these findings.

2.2 Uses of annatto seeds and extract

Gupta (2016) studied that Bixa orenalla the sindoor plant or Lipstick Tree, belonging to Bixaceae family has phytochemical and pharmacological use. The bixin and other alkaloids present are being used for different medicinal and cosmeceutical uses. Pharmacological activity proved as studied in in-vitro and in-vivo models reports antioxidant, anti inflammatory, anti malarial, diuretic, hyperglycemic, anti dysentric, laxative, as an antidote in snake bite and focusing on treatment and prevention of cancer. It is found safe and effective in various studies performed. Even it is worth noting that most of the works developed with the plant have been produced in tropical America. Special attention should be given by asian scientists to commercialize these historical plant. The published literatures provide information on the origin, chemistry, extraction methods, formulations and toxicological spects in a quite scattered way. The present review compiles information in the literature that reveals the recent findings on its potential ethanobotanical applications with its Pharmacological and safety aspects.

Madrid *et* al. (2016) reported that *Bixa orellana* (family Bixaceae) seeds have a high carotenoid content, for the most part bixin, it is a fast growing and neotropical perennial tree. As a characteristic pigment the annatto seed extract is now utilized in the cosmetic industries, food, in pharmaceutical and commercially known as annatto. In recent times, the different biological and medical properties of this natural pigment were considered. The most reported properties are anti oxidative; but its anti-cancer, hypoglucemic, antibiotic and anti-inflammatory properties are are additionally being considered. In any case, its nutritional and remedial properties require further examination.

Srineeraja (2015) Studied that Bixa orellana has been used for several biological applications by indigenous communities in Brazil and other tropical countries, which indicates its potential use in pharmaceutical products as an active ingredient. It is a shrub used as an ornamental plant in India and it is the best source of the natural pigment, produced from the fruit. medicinal remedies are made by the plant Parts. Bixa orellana is well known for its coloring agent and medicinal value. Bixahas also been suggested to possess antidiabetic, antifertility, antifungal, anticancer, hepatoprotective, antimicrobial, cardio protective,

antispasmodic, antiemetic, analgesic, adaptogenic and diaphoretic actions. Annatto used in body paint, food dye, stomach distress, treatment for heart burn, insect repellant and sunscreen. The main actions of annatto color are it kills germs, parasites, bacteria, stimulates digestion, increases urination, lowers blood pressure, protects liver and mildly laxative. It reduces inflammation, cough, soothes membrane, cleanses blood, blood sugar, reduces fever, heals wounds. Therefore, this study had comprises a efficient analysis about the use of Bixa Orellana. This investigation demonstrates the well-characterized pharmacological activities that might be viewed as significant for the future advancement of an innovative therapeutic agent.

Kripanand *et al*. (2013) studied that Annatto is frequently used to add color to dairy products, for example, cheese, butter. In India no customized definitions accessible to get standardized colour shades for the products, because of usage of annatto is restricted to cheese and butter. For this reason, the investigation started only some dairy products (butter, cheese, paneer, biscuit cream, icing cream), to build up the suitable annatto color formulations and level of use. By utilizing color separated from annatto seeds, water soluble potassium carbonate formulation (nor-bixin, 11.24 %), oil soluble formulation (1.35 % bixin) and an oil/water soluble propylene glycol formulation (PG formulation, 1.31 % bixin) was prepared. colour concentration in the experimental products were measured for standardizing .

Cuong and Chin reported that annatto seed extract incorporation with meat product. Annatto seed extract have antioxidant abilities as well as water and fat holding capacity which could be suitable for incorporation with meat foodstuffs. This study explored that over refrigerated storage, the impact of the powder, on the physicochemical properties as well as the antioxidant and antimicrobial activities of pork patties. Five pork patty were treated with three different concentrations of annatto seeds, 0.1, 0.25 and 0.5%. The outcome result show that, annatto seed powder appear to reveal antioxidant activity. Due to the presence of bixin and norbixin the redness estimations of pork patties increased. Therefore, annatto seed powder as natural antioxidants and antimicrobial agents,

could be utilized in the production of meat products to extend the time span of usability.

Irobi *et al*., studied that by using the agar diffusion and tube dilution methods, in vitro antifungal and antibacterial activity was e analyzed for an organic extract of annatto (Bixa orellana) leaves,which may be obtained 95% ethanol. The minimum inhibitory concentration may be obtained in the annatto extract was 4-16 mg/ml while its bactericidal action (MBC) was exerted at higher doses (16-64 mg/ml). The extract therefore, appears to hold a narrow spectrum of antimicrobial activity, which might be effective against only for the Gram-positive bacteria utilized in our examination.

2.3 Extraction of sindoor from annatto seeds

Pattanaik *et al.* (2019) study on the extraction of bixin from annatto seed different solvents (hot and cold). In these study the seeds were collected from different geographical locations (Chhattisgarh and Uttaranchal) of India. For the characterize the crude annatto extract TLC (Thin Layer Chromatography) might be used and for to analysis of purity HPLC (High-Performance Liquid Chromatography) and spectrophotometer were used. The results obtained were compared conclusion that the highest amount of bixin was obtained from Chhattisgarh variety of annatto seed (21.13%), extracted by hot extraction method using acetone as a solvent. Comparison between highly non-polar or polar solvents (hexane and ethanol), the medium polar solvent (acetone) could be extraction more amount of bixin from annatto seeds.

Husa *et al*. (2018) study on the bixin stability during different storage condition. The polar solvent (Methanol, acetone and distilled water) may be utilized to remove bixin from B.orellana. The result show that as compared to the water, methanol and acetone are used for extraction gave darker of the bixin colour. However, the disintegration rate of the bixin was faster in acetone and methanol as compared to the water. By using the different method, bixin extracted from different solvent was analysed. The result indicates that in methanol extract gave bixin concentration i.e., 817.7 ppm and in acetone and water was 602.9 ppm and 477.19 ppm respectively. On the other hand in storage stability study, bixin in the water held its colour after 25 days. As compare to the methanol and water

extract, the deterioration of acetone gave the highest reduction of bixin colour in every storage conditions, Thus, proper extraction and storage are required.

Sylvia *et al.* (2017) studied on different physical methods such as: the mechanical fractionation method, integrated process of mechanical fractionation method and low-pressure solvent extraction (LPSE). In mechanical fractionation process a fine particle fraction increased in Batches 1 and 2, from 2.9 to 7.6 g bixin/100 g seed and from 3.0 to 16.6 g bixin/100 g seed respectively. The cost of manufacture (COM) was significantly lower in mechanical fractionation method compared to integrated process. This work suggests that mechanical fractionation method is an adequate and low-cost process to obtain a rich-pigment.

Mehta *et al.* (2015) study on extraction process. In these process for extraction of annatto, the seeds submerge in water for 24 hrs at 0%, 50%, 100% and 150% (v/w) at room temperature and also extraction with castor oil at 100°C . The result show that the most extreme bixin percent was found from the seed which is pretreated with 50% (v/w) water soaking i.e., 0.46% bixin. Similarly for oil soluble annatto extraction method, using castor oil at 120ºC for 1 hrs, the greatest extraction of bixin (0.99 %) was found and in mustard oil extraction at 60ºC temperature for 1 hr least bixin (0.03 %) was recorded. Better extractability might be obtained from sesame oil and ground nut oil. Compare to all above process, castor oil at 120°C for 1 hr gave better outcome concerning bixin extraction. In commercial food applications, extraction with oils like sesamum oil and ground nut oil can be utilized according to there edibility and extractability**.**

Giridhar *et al*. (2014) study on bixa orellanna, that during the most recent three decades, for the production of bixin and norbixin different extraction and downstream processing strategies were reported in the form of publications, patents and processes. The main purpose of annatto extract utilization were: in foods, as cosmeceutical, textiles industry, use in pharmacy and also as dietary supplement, all are taken into consideration to select the best extraction method to get rid of solvent residues, and also to obtain good color constancy.

Rodrigues *et al.* (2014) reported that the pressurized liquid extraction (PLE) is a process of extracting organic compounds that can be applied to a different variety of solid and semisolid samples. The study was evaluate the performance of

PLE. In this study for extracting bixin from deffated annatto seeds, PLE and LPSE were used. Water, ethanol and ethyl acetate used as a solvents for extractions, performed at 2 MPa and 333 K. LPSE were performed at room temperature and pressure for comparison purposes. The quantification of the bixin is done by a spectrophotometric method at 487 nm (extinction coefficient 3.090). Water was used as solvent then the lowest and highest process yields were obtained: 0.80% (PLE) and 20.1% (LPSE). 17.5% (PLE) and 9.5% (LPSE) was yields for the solvent (ethanol). The effects of process conditions were less important for the solvent ethyl acetate: the yield was 19.65% for PLE and 14.3% for LPSE. The main advantages of PLE over LPSE is to reduced solvent consumption and shorter time extraction. The solvent water in PLE is not a recommended process indicated by preliminary results. Although the ethyl acetate presented the best yield of bixin by PLE, ethanol is generally recognized as safe (GRAS) solvent so it is the best alternative. Therefore, it is suggested to use ethanol in the extraction of bixin by PLE in defatted seed.

Van Chuyen *et al*. (2012) study on annatto seed in which bixin was extracted in acetone by submerging the seeds and also the seed is extracted by combined extractions by utilizing the sodium hydroxide and soybean oil in the dark to advance extraction yield and also decrease the volatile compounds in annatto extracts. There is no more advantage of dark extraction when acetone is used as a solvent. The prohibition of light from acetone extraction process, the yield may be obtained (68.5%) other than process completed under daylight (67.3%). In a combined extraction process extremely low level of volatile compounds are present. In this procedure significantly higher extraction yield (53.7%) might be accomplished compared to a single extraction sodium hydroxide (31.8%) and soybean oil (42.9%) alone. The combined extraction significantly improved bixin yield compared to the original extraction methods. These review demonstrated that combination of sodium hydroxide solution and soybean oil may be a good alternate for single extraction with each one alone.

Cardarelli *et al*. (2007) study to obtain annatto extracts with different solvents. The bixin level are different in different extraction solvent. The extracts obtained with methanol/water and ethanol/water were low bixin levels and a slight

yellowish color, whilst extracted with methanol, ethanol and ethyl acetate showed red color and higher bixin contents. Ethyl acetate was the best solvent which gave bixin (4.9 mg bixin/g seeds), whereas in the most polar extracts (methanol/water extract) the highest total phenolic levels were achieving (1.84 gallic acid equivalent/g seeds). Taking into consideration the antioxidant and colorant properties, solvents with medium polarity, especially methanol utilized to obtain useful annatto extracts

2.4 Phytochemical analysis of annatto seed

Gul Rahman, *et al.* (2017) evaluate the antioxidant activity, screening the phytogenic chemical compounds such as reducing sugars, phenolic compounds, cardiac glycoside, alkaloids and flavonoids present in the *E. intermedia* to prove its uses in Pakistani folk medicines for the treatment of asthma and bronchitis. By using 2,2-diphenyl-1-picryl-hydrazyl-hydrate assay, antioxidant activity was analyzed. Standard methods were used for the identification of cardiac glycosides, phenolic compounds, flavonoids, anthraquinones, and alkaloids.

Ngo *et al*. (2017) study on the impact of selected common organic solvents on extractable solids, phytochemical composition, and antioxidant capacity of *S. chinensis*. The results showed that the solvents use were affect the extraction of total solid and phytochemical compounds as well as antioxidant capacity of *S. chinensis*. Extractable solids, phytochemical composition, and antioxidant may be extracted from methanol, 50% ethanol, 50% methanol, and 50% acetone. Acetone (50% v/v) had the highest extractable solids (15.6%),

Phenolic compounds	60 mg GAE/gm Distill water
TFC	100 mg CE/gm Distill water
Proanthocyanidins	47.4 mg CE/gm Distill water
Saponins	754 mg EE/gm Distill water
Antioxidant capacity	470 mM TE/gm Distill water

Therefore, 50% acetone is recommended for extraction of phenolic compounds, their secondary metabolites, saponins, and antioxidant capacity from the root of *S. chinensis* for further isolation and utilisation.

Shahid-ul-Islam *et al.* (2016) study on the different phytochemicals compound present on the all parts of *Bixa orellana*. The main compounds viz: Carotenoids, apocarotenoids, sterols, terpenoids and terpenes are found in all parts of this plant and are accounted for to show a wide scope of pharmacological activities. Significant research work has just been done and is at present in progress for its applications in cosmetic, food, leather, solar cells, textile, and other industries. In order to bring more interest on this dye plant this review gives data on the traditional usage, phytochemistry and pharmacology of annatto and also highlights its non-food industrial applications.

Agarwal, *et al.* (2016) studied that the Plants are the source of different drugs belonging to various therapeutic cateogries like antidiabetics, antispasmodics, antihypertensives, anticancers, antidepressants, antimicrobials, etc. Plants are used to treat various ailments and these plants have been used by different individuals and tribals worldwide. Use of plants to treat various ailments have also been mentioned in Ayurveda. Along these lines, various researchers are involved in isolating and assessing different bioactive molecules, to be isolated from various plant sources. Isolation of bioactive molecules is not a easy task for researchers. This review gives a focus on extraction and phytochemical screening methods along with their merits and demerits.

Prathima *et al.* (2016) reported the antimicrobial activity of *Bixa orellana* seeds and leaf extracts against pathogenic organisms. In different solvent (polar and non-polar) such as methanol, petroleum ether, ethanolic aqueous extracts, active components in the plant material was identified to study the presence of various phytochemicals in *Bixa orellana*. Among seeds and leaf extracts, methanolic seed extracts of *Bixa orellana* have shown better antimicrobial activity. Extract using polar solvent is higher antimicrobial activity than non-polar solvent.

Tagans *et al*. (2015) study to determined the antioxidant properties of ten selected fruit peels viz: rambutan, mango, marang, santol, soursop, lakatan, avocado, lanzones, watermelon and dragon fruit. For determination of antioxidant properties (qualitative and quantitative), the total flavonoids, total phenolics and vitamin C of the methanolic extract were analyzed. Highest total flavonoids

(213.45 mg quercetin/g dried material) was abtain after quantitative analysis in lanzones. In Rambutan high amount of total phenolics concentration (96.69 mg GAE/g dried material) and vitamin C (36.47 mg ascorbic acid/gm dried material) was obtained. In Dragon fruit the total phenolics (0.66 mg GAE/gm dried material) and total flavonoids (5.70 mg quercetin/g dried material) was minimum; no vitamin C was detected.In recognized antioxidants, Flavonoids, phenolics and vitamin C were listed.

Sangvikar *et al.* (2015) study on leaves and seeds of *Bixa orellana L*. The research work was carried out, which showed that in all the extracts The various phytochemical constituents and bioactive compounds are presence in varying range and quantity. Based on the selection of solvent system and procedure selected for extraction, affect the quality and quantity of phytochemicals . During the research work, this physicochemical parameters were also determined. In the aqueous, alcoholic and hydro-alcoholic extracts of seeds and leaves, the phytochemical analysis (Qualitative and Quantitative) was done, which showed the presence of various phyto-constituents i.e. saponins, tannins, flavonoids, phenols, carbohydrates, proteins, amino acids, steroids, glycosides and alkaloids. Commercially the phytochemical analysis of the plants is most important for the production of the new drugs in pharmaceutical companies for curing of various diseases.

Abayomi *et al.* (2014) studied that The Bixa orellana seed extracts showed bacteriostatic and bactericidal activities against Gram-positive bacteria Staphylococcus aureus and Bacillus subtilis. The extracts contain the phytochemical constituent saponins, tannins, steroid, terpenoids, glycoside, flavonoids and carbohydrate. The antimicrobial activity of different extract of *B. orellana* seed was tested. In ethanolic and dimethyl sulphoxide solution at low concentration (250µg/ml) the antibacterial activity of the seed extract was observed while, in potassium hydroxide, antibacterial activity against *Staphylococcus aureus* and *Bacillus subtilis* was observed at 750µg/ml. Ajiboye, *et al.* (2014) reported to find out the presence of phytochemicals both qualitative and quantitative screening methods in the aqueous extracts of *Senecio biafrae* leaves. In qualitative analysis, the phytochemical compounds such as saponin, alkaloids, tannin, anthraquinoes,

phenol, phlobatannin, flavonoids, steroids, glycosides, terpenes, cardenolides and chalocones were determined by using standard methods in the sample aqueous extracts. For nine phytochemical tests the aqueous extract of the *Senecio biafrae* showed positive results. Also, quantitative analysis of the important secondary metabolites (tannins, saponins , flavonoids, phenolic and alkaloids compounds) were tested in the sample extracts. Results concluded that for the medicinal purposes the presence of these active compounds may be responsible of the plant. This findings show that active phytochemical compounds present in the leaves extract of *Senecio biafrae* with hypoglycaemic, anti-diabetic properties and other degenerative diseases potentials.

Baba, *et al.* (2014) evaluated the antioxidant and antimicrobial activity of a methanolic extract of the roots of *Arisaema jacquemontii*. The 1,1-diphenyl-2-picryl-hydrazyl (DPPH), nitroblue tetra zolium (NBT) and ferric reducing power tests was used to determined antioxidant activity. The extract had significant antioxidant activity in all assays, with values of 64.17 ± 0.19% in the DPPH and 62.17 ± 0.17% in the NBT assays, and reduced Fe3+ferricyanide complex to the ferrous form (Fe2+). Broth dilution method was used to calculate Antibacterial activity and minimum inhibitory concentrations. At the minimum inhibitory concentration of 0.24–0.41 mg/ml, root extract prevented the growth of both Gram-positive and Gram-negative bacteria. Antifungal activity, measured as inhibition of mycelium growth, was 28.32–36.50%. The antimicrobial and antioxidant activities of the extracts were positively associated with the total phenolic and flavonoid contents of the extract.

Ganju *et al.* (2014) study on phytochemical analysis of annatto seeds. The preliminary phytochemical screening. was done to detect the presence of various phytoconstituents in the different solvent extracts of annatto seeds. In all the extracts the phenolic compounds and flavonoids were present but the maximum amount of phenolic compounds (75.3 mg of GAE/g of extractive) and antioxidant activity (IC50= 20µg/ml) was found in the aqueous extract. Isolation of purified bixin was done from the seeds. Approximately 1% purified bixin was obtained from the seeds of B.orellana.

Madhu, *et al.* analyze 10 medicinally important plant species were screened for their phytochemicals (quantitatively) by using 4 different solvent (water [AQ], Acetone [AE], Petroleum Ether [PE] and chloroform [CF]) extracted from their selected parts (leaves, stem, pericarp of the fruit and seeds cotyledons). All the plants which are selected for the study contains phytochemicals like saponins, phenols, flavonoids, alkaloids and steroids. The highest concentrations of alkaloids are observed in *L.officinale* leaf and *F.vulgare* stem extracts by using PE. The highest amounts of flavonoids are seen in AQ and PE extracts of *G.indica, D.loureiri, S. saponaria.* The moderate concentrations of phenols are reported in AQ and PE extracts of *J.curcas* and *S.saponaria* plant species. The high concentrations of steroids are reported in *S.saponaria* plant fruit pericarpic extract with PE. The concentration of phytochemicals varied, when different organic solvents are used for the extraction procedure.

2.5 Design of machine

Chuba, *et al.* (2018) design, fabricate and evaluate the efficiency of an experimental bench device for pulping bocaiuva fruits. The bench device was designed to be compact and easy to operate, with intermittent operation. In this process pulping performed by shearing. The pulp extraction yield represent the performance, showed higher efficiency than those reported in the literature. During the pulping process period (150 seconds), every 15 seconds, the pulp weight was evaluated. Fruits that were dehydrated for 24 hours have highest pulping efficiency (96%), with a 120-second pulping, which resulted in a production rate of 5.5 kg h-1 This high efficiency makes this mechanized prototype effective for pulping bocaiuva fruits and, thus, it can replace manual pulping, especially in rural communities involved with the bocaiuva production chain.

Nikam, *et al.* (2018) design, development and fabrication of fruit juice extracting equipment. For the pulp extraction, force is needed which is depends on the biological nature and structure of the fruit from which pulp is to be extracted. The overall extraction is to achieve by means of small sharpened blades on a shaft.By the electrical motor shaft rotates against the stationary sieve. The main aim of this study is to carrying out the performance evaluation of different equipment's such as manually operated and power operated which will help to

minimize time consume, working fatigue and to reduce labour cost for pulp extraction of guava. Also the objective of this equipment is satisfied with the designs that have been developed from the available local materials.

Sonar, *et al.* (2018) developed mango pulper, the pulp of mango is usually extracted by squeezing. For the extraction of the pulp the squeezing force is applied over the fruit with the help of the hands. For mass production it is necessary to extract the pulp with greater rate. This pulp is then preserved for later use. For extraction of mango pulp in mass production, there is no domestic appliances. We are designing this project to overcome this drawback. The capacity of machine is as high as 200 kg of pulp can be extracted per hour. By change in motor rpm and drum size, the capacity can be increased. By adopting the pulp extraction by brush type pulping machine concept the pulp can be extracted due to friction between the brush and the perforated sheet sieves. This project will overcome all the drawbacks of manual pulp extraction and give the hygienic pulp for processing.

Math, *et al.* (2015) designed and fabricated a small, continuous power operated machine with a capacity of 132 kg/h and evaluated its performance for separation of annatto (Bixa orellana L.) seeds from freshly harvested pods. To design a machine Physical and engineering parameters of annatto pods and seeds were evaluated.

Density	Pod	134.7 to 186.0 kg/m^3
	Seed	1206 to 1253.9 kg/m^3
	Husk	317 to 381.4 kg/m^3
Moisture content	Seed	18.83 – 20.1 % (db)
	Pod	8 to 10 % (db)
Angle of repose	Pod	30.15° to 35.76°.
Bixin Content		1.34 to 1.765 %.

The machine consisted of beaters with different pitch of 40, 45 and 50 mm and concentric cylinders and a length of shaft is 800 mm. 132.5 kg/h is the actual machine output. Maximum bixin content was found to be retained at 300 rpm.

Gbasouzor, *et al.* (2014) design and fabrication of fruit juice extracting machine, this machine has the ability to slice and extract juice from fruits and vegetable such as grape, aloevera, tomato, passion fruit, apples, mango, orange, pineapple and awla with the help of the slicing blade, screw conveyor, electric motor, gear train, conical resistor and bearings. The efficiency of the machine is 67% output and the throughput of 4.8 litres/Min. The machine is also design for home and industrial usage.

CHAPTER III
MATERIAL AND METHOD

This chapter deals with the method of various experiments conducted to achieve the objectives of the present investigation. These include the physico-chemical properties of the annatto seeds and there extraction procedure with different medium. Present chapter also deals with the description of theoretical design considerations of a machine for extracting the sindoor from annatto seeds. The research work was undertaken at the Department of Agricultural processing and Food Engineering, SVCAET and RS, FAE, IGKV, Raipur.

3.1 Plant material

Collection of seeds

Harvested and threshed annatto seed procured from DKS College of Agriculture and Research Station, Bhatapara (CG). The initial moisture content of the grain was determined by standard method. (Sahay and Singh, 2001).

3.2 Physical characteristics

The various physical characteristics studied were size, shape, Geometric Mean Diameter, Sphericity, thousand grain weight, thousand grain volume (test volume), bulk density, True density, Porosity, Angle of Repose, Coefficient of friction using standardized methods. Physical properties of the seeds are very important to optimize design and development of the machine The methods are outlined below.

The equipment used for different physical properties were digital varnier calipers, Weighing balance, Centrifuge etc.

Equipments:

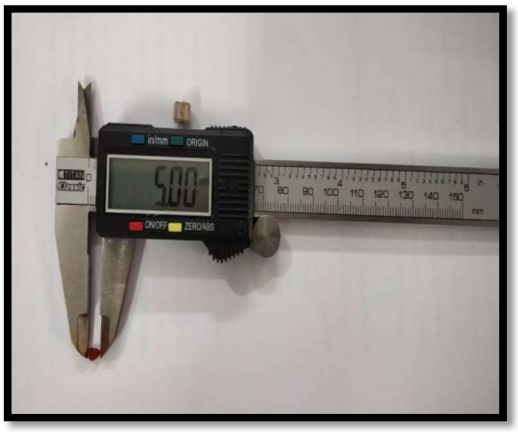

Fig. 3.1: Digital Venire Caliper

Fig. 3.2: Weighing balance

Fig. 3.3: Angle of repose measurement

Fig. 3.4: Centrifuge

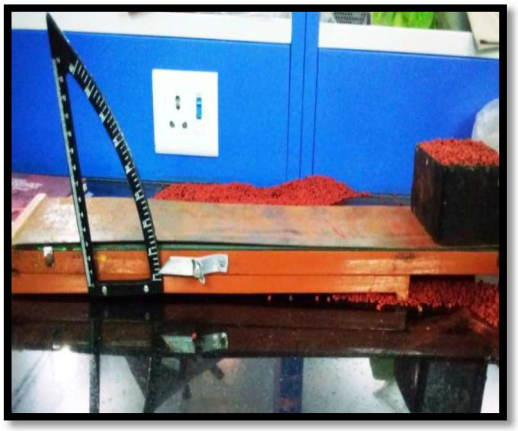

Fig. 3.5: Coefficient of static friction measurement

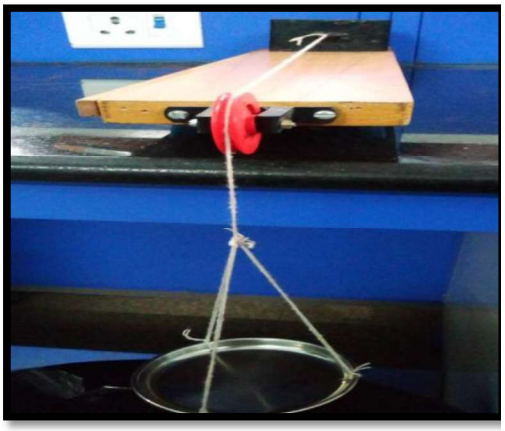

Fig. 3.6: Coefficient of kinetic friction measurement

3.2.1. Size

The digital venier calipers, having least count 0.1mm is used to measure the length, breadth and thickness of seeds. The values were expressed as means of ten randomly selected seeds.

3.2.2. Shape

L/B ratios were calculated by dividing the cumulative length of 10 seeds by the cumulative breadth of 10 seeds. Based on length breadth ratio, seeds were classified into conical, or triangular to pyramidal in shape.

3.2.3. Geometric Mean Diameter

The geometric mean diameter (equivalent diameter), was measured by using the method suggested by Sahay and Singh (2001).

$$D_g = (LWT)^{1/3} \quad (3.1)$$

3.2.4. Sphericity

It is the ratio of the diameter of a sphere of same volume as that of the particle and the diameter of the smallest circumscribing sphere of the particle (Sahay and Singh,2001).

$$S = \frac{(LWT)^{1/3}}{L} \quad (3.2)$$

3.2.5. Bulk density

The standard weight test procedures used to determined the average bulk density (ρ_b) of the seeds by filling the container of 500 ml with the sample of 100 ml from the height of 150 mm and then content was weighed (Singh and Goswami, 1996).

The formula for bulk density calculation is:

$$\text{Bulk density (kg/m}^3) = \frac{\text{Weight of the seeds,kg}}{\text{Volume of seeds,m}^3} \quad (3.3)$$

3.2.6. True density

The true density (ρt) of annatto seeds to was determine by using the toluene displacement method (Singh and Goswami 1996; Mohsenin 1986).The average true density was calculated as it is the ratio of weight of the seed sample to volume

of toluene displaced. The volume of toluene (C_7H_8) displaced was found by immersing a weighed quantity of seeds samples in the toluene (Singh and Goswami, 1996).Seeds (0.05 kg) was immersed in a 0.5 L graduated measuring cylinder in which toluene (0. 1 L) was filled. We recorded the amount of displaced toluene. The true density was evaluated as the ratio of sample mass to the volume of displaced toluene.

$$\text{True density (kg/m}^3) = \frac{\text{Weight of the seeds}}{\text{Volume of toluene displaced}} \times 1000 \quad (3.4)$$

3.2.7. Porosity

From bulk (ρ_b) and true (ρ_t) densities the porosity was calculated by using the following equation (Mohsenin, 1970).The porosity (ε) was calculated using Eq. 3.5 (Mohsenin 1986):

$$\varepsilon = \left(1 - \frac{\rho_b}{\rho_t}\right) \times 100 \quad (3.5)$$

3.2.8. Thousand seeds volume cm^3 (Test Volume)

Thousand seed volume was found by toluene (C_7H_8) displacement method (Singh and Goswami, 1996). For determination of test volume,1000 seed was immersed in a 0.5 L graduated measuring cylinder in which toluene (0. 1 L) was filled. We recorded the amount of displaced toluene. The volume displaced is equal to the 1000 seed volume.

3.2.9. Angle of Repose

The angle of repose is the angle between the base and the slope of the cone formed by the vertical fall of the granular material on a horizontal plane. the angle of repose of seeds affected by size, shape, moisture content and orientation. Angle of repose of the annatto seeds was calculated from the height and diameter of the naturally formed heap of the seeds on a circular plate which was measured by measuring scale.

Angle of repose was measured by using the following formula.

$$\text{Angle of repose}, \theta = \tan^{-1}[(H)(D/2)] \quad (3.6)$$

Where,

H = Height of the Heap, mm

D = Diameter of the circular plate, mm

3.2.10. Coefficient of friction

3.2.10.1. Coefficient of static friction

The static coefficient of friction (μ) was determined on three different surfaces: plywood, mild steel, and rubber sheet. A hollow wooden box was placed on an adjustable tilting plate lined with the test surface. The box was filled with the seeds. The inclination of the plate was increased slowly until the box just started sliding down the surface and the angle of surface (α) was read from a scale.

The coefficient of static friction is equal to the tangent of the angle at which the objects slide

$$\mu = \tan \alpha \tag{3.7}$$

where,

μ = static coefficient of friction.

α = angle between horizontal surface and inclined plate.

3.2.10.2. Coefficient of Kinetic Friction

The coefficient of kinetic friction (μ) was determined on three different surfaces: rubber sheet, plywood and mild steel. On the surface of a table a small, rectangular block are placed and attached a hanging mass to the block via a string and a pulley.

The Coefficient of friction is the ratio of force of friction to the normal force

$$\mu = \frac{F}{N} \tag{3.8}$$

Where,

μ = coefficient of kinetic friction,

F = Force of kinetic friction,

N = Normal force or the force perpendicular to the contacting surfaces.

Fig. 3.7: Hot Air Oven

Fig. 3.8: SOCS PLUS

Fig. 3.9: Fiber plus

Fig. 3.10: Muffle furnace

Fig. 3.11. UV- VIS Spectrophotometer

Fig. 3.12. Distillation unit for crude protein analysis

3.3 Chemical composition (Proximate analysis)

3.3.1. Moisture Content

In previously weighed Petridish, 10 g sample was taken. At constant temperature 105±1 °C of oven, the moisture cup along with sample was placed for 24 h. Repeating the process of drying, cooling and weighing at 30 min intervals, until a constant weight was attained. Then it was transferred to a desiccators, After cooling it was weighed. The moisture content on w.b. was calculated as (Sahay and Singh, 2001)

$$\text{Moisture Content}(\%\ \text{w.b.}) = \frac{W_1 - W_2}{W_1 - W} \times 100 \quad (3.9)$$

Where,

W = Weight of empty petridish, (g)

W_1 = Weight of Petridis with sample before drying, (g)

W_2 = Weight of Petridis with sample after drying to constant weight, (g)

3.3.2. Fat content

Fat content was determined by using AOAC (2005) method. It was estimated using SOCSPLUS system. 2.0 g of sample was weighted and taken into thimbles and kept in the beakers. In a beaker 80 ml of solvent (petroleum ether) was poured. One by one all the beakers were loaded into system and switched 'ON' the system. The temperature of heating plate was set at 80 °C and the process was continued about 1.5 h. After completion this process, temperature was increased to 180 °C. In order to collect the remaining fat that may present in sample was collected by rinsing the sample about 2 times. Then all the beakers were removed and place in hot air oven up to complete removal of solvent. Final weight of beaker was taken after cooling the beaker in desiccators. The fat content in the sample was calculated as:

$$\text{Fat content}\ (\%) = \frac{W_2 - W_1}{W} \times 100 \quad (3.10)$$

Where,

W_1-Weight of empty beaker (g)

W_2- Weight of beaker with oil (g)

W- Weight of sample (g)

3.3.3. Ash content

Ash content was determined by A.O.A.C. (2005) method. Accurately weighed 2.0 g sample was put in to a previously dried and weighed crucible. The crucible with sample was placed in a muffle furnace at 550 ± 10 °C for 4 to 5 h, until ash was formed. After completion this process the crucible is cooled in a desiccators and weighed. The percent ash content can be calculated:

$$\text{Total ash (\%)} = \frac{W_2 - W}{W_1 - W} \quad (3.11)$$

Where,

W = Weight of empty dish, g

W1 = Weight of dish with sample, g

W2 = Weight of dish with ash, g

3.3.4. Crude Fiber Content

Determination of fiber content, 2.0 g fat free sample (W) was taken. 150 ml H_2SO_4 was used for first digestion process, complete in 30 min. Residue in digestion tube was washed with hot distilled water. Then second digestion was done with 150 ml NaOH for 30 min and again washed with hot distilled water. At 100ºC this residue was dried in hot air oven until constant weight (W_1) was obtained. For burning all the carbonaceous matter, the dried material was kept in muffle furnace at 550ºC for 5 h. Weight (W_2) was taken after it get cooled (AOAC, 2005).

$$\text{Crude fiber (\%)} = \frac{W_1 - W_2}{W} \times 100 \quad (3.12)$$

Where,

W = Weight of sample, g

W_1= Crucible weight before ashing, g

W_2= Crucible weight after ashing, g

3.3.5. Protein Content

Protein content of the annatto seeds was determined by Kjeldhal method (AOAC, 2005). 0.5 g of sample, 5.0 g of digestion mixture (Potassium sulphate, Cupric sulphate and selenium in the proportions of 50:50:1) and 10 ml of sulphuric acid (H_2SO_4) in a digestion tube were kept in digestion chamber. After completing the digestion process. The digest was then steam distilled by addition of 40ml of

40% NaOH. After distillation the liberated ammonia was trapped in the 20 ml of 4% boric acid containing 4 to 5 drops of mixed indicator, {1% Bromocresol green + 0.1% Methyl red (1:2)}. The color of the boric acid changes from pink to bluish green with entrapment of liberated ammonia. Then boric acid was titrated with 0.05 N sulphonic acid and the color of the boric acid again changes to light pink.

Calculation:

The protein content was determined by using the following formula:

$$\text{Nitrogen (\%)} = \frac{14 \times \text{Titrated value} \times \text{Normality of acid}}{\text{Sample weight}} \quad (3.13)$$

Amount of protein was obtained by multiplying the nitrogen (%) with the appropriate conversion factor (i.e. 6.25) expressed on percent basis.

3.3.6. Total Carbohydrate

The content of carbohydrates was calculated by subtracting the sum of moisture, protein, ash, fat and crude fiber from 100.

3.4 Extraction of Annatto Pigments

3.4.1. Extraction Method

Annatto seeds were extracted using different medium. 50 g of the annatto seeds was weighed and mixed with different medium. Extraction of pigment was done in 500 ml measuring cylinder. The mixture of annatto seeds and the medium was stirred using overhead motor until the color was completely extracted from the seeds. Same procedures were repeated for another type of solvent. The extracted colorant was filtered. All the extraction was performed in three replication.

Table 3.1: The different medium used for extraction

S. No.	Medium Name		Medium Volume (ml)	Seed Volume(g)
1.	Water		200	50×2
2.	Organic Solvent	Acetone	200	50×2
		Ethanol	200	50×2
		Hexane	200	50×2
		Chloroform	200	50×2
3.	Vegetable oil	Coconut oil	200	50×2

The filtrates containing pigment were concentrated on water bath and finally evaporated to dryness.

3.4.2. Determination of overall yield

The overall yield (g extract/100 g raw material), was calculated using Eq. 3.14 as the ratio of the total mass of the extract and the initial mass of the sample.

$$\text{Yield } \% = \frac{\text{weight of extract (gm)}}{\text{weight of seeds (gm)}} \times 100 \qquad (3.14)$$

Fig 3.13: Extraction Process

Fig. 3.14: Solvent Evaporation

Fig 3.15 Extracted Pigment

Fig. 3.16: Dried Sindoor

3.5 Qualitative Phytochemical Screening of Sindoor

Extracted sindoor powder was subjected to qualitative evaluations for the presence and/or absence of different groups of phytochemicals (Patil *et al.*, 2001). Powdered samples were extracted with 10% methanol. The extract obtained were

tested qualitatively with special reagents which produce characteristic colors changes. All the qualitative tests were performed following standard methods (Patil *et al.*, 2001; Danial, 1991; Harborne, 1984; Feigl, 1966;) and replicated trice.

3.5.1. Test for Alkaloids

Wagner's test: 0.5 g of sindoor is stirred with 5 ml of dilute HCL (2N) acid and heat the solution for 2 minute in water bath and filtered. In a few ml of filtrate, added a few drops of Wagner's reagent by the side of the tube. A reddish-brown precipitate indicated the test as positive (Danial, 1991).

3.5.2. Test for Terpenoids

Salkowski test: Aqueous extracts (5ml) of sindoor were mixed in 2ml of chloroform and 3ml Conc. Sulphuric acid was carefully added, to form a layer. At the interface a reddish brown colouration formed indicated the presence of terpenoid (Patil *et al.*, 2001).

3.5.3. Test for Saponins

Foam test: Saponins are the plant glycosides possessing a distinct property of forming soapy lather in water. Hence for testing the presence of saponin in the dyes, 2g each of crude dry powder of extract were vigorously shake with 10 ml of water and is allowed to stand for 10 min. Formation of stable soapy lather indicated the presence of saponin (Brain and Turner, 1975).

3.5.4. Test for Carbohydrates

The 0.5 g 0f powder were dissolved in 5ml of distilled water and filtered. The filtrate was tested for carbohydrates (Harborne, 1984; Patil *et al.*, 2001).

Benedict's test: 1 mL of filtrate solution is treated with Benedict's reagent and heated gently in water bath. Reddish precipitate indicates the presence of reducing sugars.

3.5.5. Test for Cardiac glycoside

Keller-Killani Test: To 2 ml of extract solution is treated with 2mL of $FeCl_3$ reagent (1 volume of 5% $FeCl_3$ and 99 volume of glacial acetic acid). To this solution 1ml of concentrated H_2SO_4 is added. Appearance of reddish brown colour within a few minutes at the junction of two liquid layers indicated the presence of cardiac glycosides (Danial, 1991).

3.5.6. Test for Phenol

Ferric chloride test: Powdered sindoor (0.5 g) were extracted with 5ml methanol and methanolic extracts were obtained by filtration. To 1 ml of methanolic extracts of sindoor few drops of ferric chloride solution (5%, 2ml) was added. Formation of blue to greenish violet colouration indicated the presence of phenol.

3.5.7. Test for Flavonoids

Lead acetate test: Powdered dye samples (500mg) were dissolved in a 5 ml of distilled water and 3 ml of 10% lead acetate solution was added. The reddish yellow precipitate indicated the presence of flavonoid.

3.5.8. Test for Tannin

Tannins are usually defined as water soluble polyphenolics compound and there has ability to combine with gelatin, cellulose, proteins and pectin. The extract (50 mg) is dissolved in 5 ml of distilled water, and heated in water bath, filtered. To this few drops of neutral 5% ferric chloride solution are added. A blue or greenish black or dark red colour indicates the presence of tannin (Bate-smith, 1962).

3.6 Quantitative Determination of Phytochemicals

3.6.1. Seed Extracts Preparation

The seeds of *Bixa orellana* were extracted successively by acetone, chloroform, methanol, hexane and water. Each extract was collected, weighed and dried. The solvent residue was removed by drying the extracts in water bath.

3.6.2. Quantitative Estimation of Phenoilc Compounds

3.6.2.1. Extract preparation

For extract preparation 0.5 g of powder were dissolve in 20ml of 80% ethanol, centrifuge the solution for 20 minutes on the 10,000 rpm. Supernatant was separated and evaporating to dryness in water bath, the crude extracts were obtained, which is dissolve in 20 ml distilled water.

3.6.2.2 Preparation of standard solution

A stock solution 100µg/ml of gallic acid was prepared in distilled water. Aliquots were taken from this solution to obtain phenol concentrations 10-100µg/ml. 1ml 0.5 mL of Folin–Ciocalteu‟s reagent was added to gallic acid

solutions (10-100µg) mixed thoroughly for 3 min, followed by the addition of 2mL of Na_2CO_3 solution (w = 20 %). The absorbance was measured after 60 minutes at 650nm against blank.

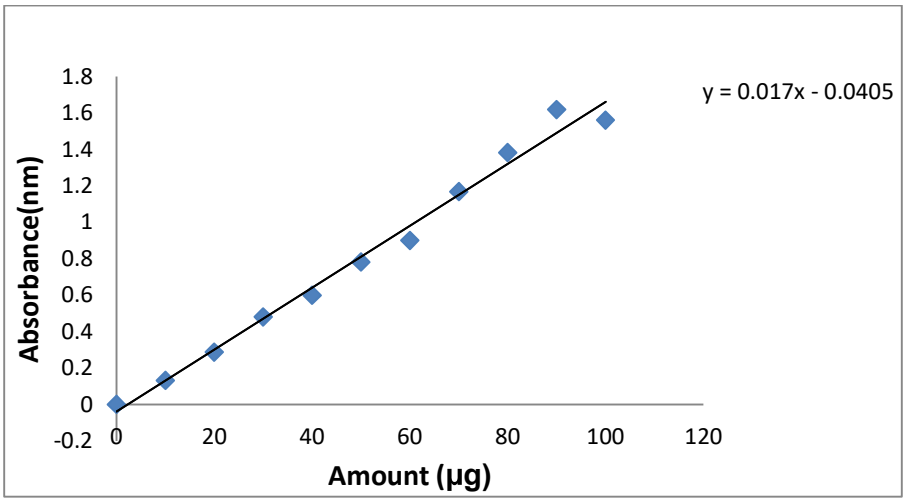

Fig 3.17: Standard curve for different concentrations of Gallic acid for phenol estimation

3.6.2.3. Estimation of phenolic compounds:

Total phenolic content in different solvent extracts was determined spectrophotometrically according to the Folin– Ciocalteu‟s method with slight modification. Briefly, 3 mL of the sample (0.2 ml extract and distilled water) was pipetted into a 10 mL volumetric flask containing 0.5 mL of Folin–Ciocalteu‟s reagent mixed thoroughly for 3 min, followed by the addition of 2 mL of Na_2CO_3 solution (w = 20 %) in each tube, place in a boiling water for exactly 1 minute, cooled, and absorbance was measured against the blank at 650 nm using a spectrophotometer. The total phenolic content was calculated from the calibration curve, the measurements were compared to a standard curve of prepared gallic acid solutions (10-100µg) and the results were expressed as mg of gallic acid equivalent per g dry weight.

3.6.3. Quantitative Estimation of saponin Compounds

Total saponin content may be estimated by the method given by Obadoni and Chuko method (2001). In these method 2 g of each extracted sample were put into a conical flask, add 25ml of 20% aqueous ethanol. Heat the samples over a hot water bath for 4 hour with continuous stirring about 55°C and filter the mixture.

Re-extract the residue with another 25 ml 20% ethanol. The combined extracts were reduced to 15 ml over water bath about 90°C. The concentrate was transferred into a 250 ml separatory funnel and add 20 ml of diethyl ether; shake vigorously. The aqueous layer was recovered while the ether layer was discarded. Repeat the purification process. Add 60 ml of n-butanol & wash twice with 10 ml of 5% aqueous sodium chloride. Heat the remaining solution in a water bath. After evaporation the samples were dried in the oven to a constant weight. The saponins content was calculated using standard formulae.

3.6.4. Quantitative estimation of total flavonoid

3.6.4.1. Preparation of standard solution

A stock solution 1000µg/ml of quercetin was prepared in 95% ethanol . Aliquots were taken from this solution to obtain flavonoid 100-1000µg/ml, then mixed with 0.1 ml of 10% $AlCl_3$, 0.1 ml of potassium acetate and 2.8 ml water. The final volume was made up to 5 ml with 95% ethanol. The tubes were then incubated at room temperature for 30 min and absorbance was measured at 415 nm against blank.

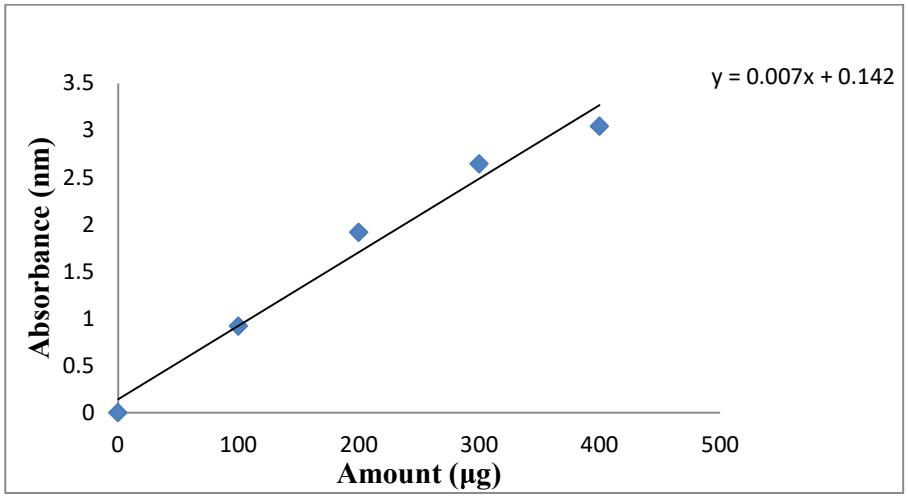

Fig 3.18: Calibration curve for different concentrations of qurecetin for flavonoid estimation

3.6.4.2. Estimation of total flavonoid

Total flavonoids were determined by aluminium chloride colorimetric technique . 0.5 g sample was weighed and kept in 95% ethanol for 24 hours. It was than filtered and volume was made up to 25 ml with 80% ethanol. 0.5 ml of filtrate

was then mixed with 1.5 ml of 95% ethanol, 0.1 ml of 10% $AlCl_3$, 0.1 ml of potassium acetate and 2.8 ml water. The tubes were then incubated at room temperature for 30 min and absorbance was measured at 415 nm. The flavonoids content of the samples was calculated from the standard graph of quercetin.

3.7 Conceptual design of extraction machine

3.7.1. Design consideration

The following design considerations were taken care during designing of the machine.

1. The height of the machine was decided from the ergonomic point of view
2. The machine is used for extraction of bixin powder from annatto seeds.
3. The major part of machine should be made up of stainless steel.
4. The machine should be pollution free.
5. The system should be capability to extract uniformly.
6. The cost of machine should be low.
7. Its operation and maintenance should be easy and can be operated by a semi skilled personals.
8. There should be enough safety for operator.
9. The provision of recycling solvent should be there to reduce the operational energy.

3.7.2. Principle of operation

The extracting unit works on the principle of friction force. In extraction chamber the solvent is used in which the seed is submerged, by brushing action the pigment was dissolve in solvent. After that the pigment and solvent was removed from extraction chamber.

3.7.3. Machine Description

In the present investigation, for the extraction of the sindoor from annatto seeds, a machine was designed which utilizes the frictional forces generated by the rotation of the brushes of the extracting unit and the inter-granular frictional forces generated due to movement of the seeds. The extract was drained through the outer cylinder into the outlet from where it is collected while the residual waste is collected at the seed outlet. The construction materials being were stainless steel

powered by 1 hp single-phase electric motor. the machine consists of three sub system (1) The Energy unit (2) Transmission unit (3) The processing unit

The sindoor extractor machine consists of the following major components: hopper, extraction chamber, extract outlet, waste seed outlet, frame, electric motor and motor stand. The extraction chamber consists of two cylinder (inner and outer cylinder).Inner cylinder is perforated type which houses a uniform diameter. The perforated drum is essentially a cylindrical drum on which series of perforated holes were drilled in an orderly manner. The perforations were roughened in the internal surface of the drum to form an abrasive surface for fraction the seeds. Central extracting unit of the machine consists of a brushes fixed on stainless steel shaft. Extraction of sindoor can be achieved by frictional forces generated by the extracting element of the machine.

3.7.4. Material Selection and Components Used

For the extraction machine components required should have high corrosive, oxidation resistance. Along with this they should have high rusting resistance therefore stainless family is more advantageous for the machine components. Also for food processing units stainless steel is used. Machine component such as inner cylinder, outer cylinder, shaft and hopper are made by stainless steel. While the frame is made with the material which is easily available and can be easily weld. For this mild steel is used. For brushing the seeds nylon material is used to make brushes of the machine. Nylon is a thermoplastic, silky material used in food processing brushes. As per the requirement, food Grade, brushes are made in various sizes.

3.7.5. Description of various parts of the machine

3.7.5.1. The Feed Hopper

The hopper is essentially the part of the machine, where the seeds are being put into the machine, and also acts as a container and at the same time introducing the seeds in to the extracting chamber. The hopper is made of stainless steel, which is trapezoidal in shape and welded to the inner cylinder.

3.7.5.2. The Main frame

3.7.5.3. Outer cylindrical chamber

Frame is the main part of the machine, on which other parts are welded. It is made of mild steel. It supports and carries the weight of the machine and its components. The outer cylinder is circular drum, which is constructed with stainless steel. One side of the cylinder is open and fixed with a circular plate so that inner cylinder and shaft assembly can be easily accommodated Also at the lower end of the cylinder a collecting funnel was attached so that extract can flow out into a container. It is welded to the main frame of the machine. At the bottom of the main frame the electric motor was also mounted

3.7.5.4. The Extracting Chamber

The extracting compartment contains perforated inner cylinder, shaft, brush with brush holder.

3.7.5.4.1 Inner cylinder

It is perforated circular drum constructed with stainless steel. Through pulley and belt arrangement, the shaft is connected to electric motor. Nylon brushes are attached to the brush holder which is mounted over the shaft.

3.7.5.4.2. Shaft

A Shaft is a rotating element, usually circular in cross section. The solid power shaft was made of stainless steel. It was supported by ball bearings at the end on the main frame. The ultimate shear stress of a stainless steel shaft from design data is 505MPa and yield stress 215MPa. Allowable shear stress is usually 60% of the yield strength value. It is powered by electric motor by means of V-belt pulley arrangement.

3.7.5.5. Bearing

Bearings were used to support and align the shaft and coupled at both ends and also make the operation almost frictionless They carry the shaft to absorb torque and prevent the shaft from wobbling.

3.7.5.6. Motor

To drive the extractor motor supplies the power. It is mounted on the frame below the shaft pulley and has its pulley connected to that of the shaft through a v-belt.

3.7.5.7. Outlet

The outlet portion comprises two major outlets, one on inner cylinder and other is on to outer cylinder In outer cylinder consist of a sloped channel connected to extractor drum through which extracte out from the cylinder. The seeds are in the inner cylinder through which the seeds are taken out from the machine.

3.7.6. Designing of machine components

3.7.6.1. Size of feed hopper:

The size of the hopper was decided by the bulk density and angle of repose of the annatto seeds. A feed hopper of trapezoidal shape was selected.

The volume of hopper is given as:

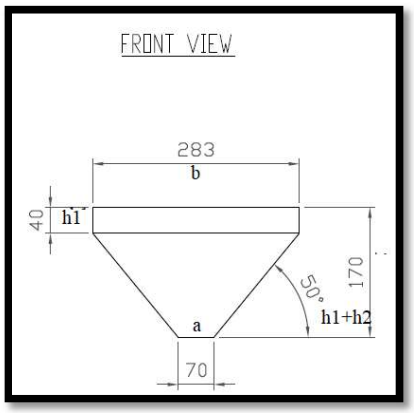

Fig 3.19: Different Section of Hopper

$V_h = V_s$

Where,

V_h= Volume of hopper, cm^3

V_s = Volume of seed, cm^3

$$V_s = \frac{\text{Weight of seed ,kg}}{\text{Bulk density of seed,kg/m}^3} \quad (3.15)$$

Total volume of hopper is:

$$V_h = V_A + V_B \quad (3.16)$$

$$V_B = \frac{(a^2+ab)}{2} \times h_2 \quad (3.17)$$

Where,

V_h = Volume of hopper having trapezoidal section ,cm^3

a = bottom width of hopper , cm

l = Distance, cm

θ = Angle of repose, degrees

h_2= Height of the hopper

b = width of side, cm

b = a+2l

putting the value in Eq. (3.18)

$$V_B = (a^2 + al) \times h_2 \quad (3.18)$$

The angle of repose for annatto seed is 45⁰. The design of hopper should be such that θ is more than 45⁰ for easy flowing of seeds. There for θ=50⁰

$$\tan\theta = \frac{h_2}{l} \quad (3.19)$$

So

$$V_B = (a^2 + ah_2 \cot\theta) \times h_2 \quad (3.20)$$

$$V_A = b \times b \times h_1 \quad (3.21)$$

3.7.6.2. Selection of electric motor

An electric motor of the following specification was selected

Power, P= 1 hp

Rational speed, N = 1440 rpm

Phase = single

Frequency = 400 Hz

3.7.6.3. Design of pulley size

The size of the pulley can be specified by the diameter of the pulley. It can be determined by the following formula:

$$N_1D_1 = N_2D_2 \quad (3.22)$$

Where,

N_1 = Speed of the driver pulley (rpm) (motor pulley)

N_2 = Speed of the driven pulley (rpm) (shaft pulley)

D_1 = Diameter of the driver pulley (mm) (motor pulley)

D_2 = Diameter of the driven pulley (mm) (shaft pulley)

3.7.6.4. Length of the belt

Length of the belt for different sizes of the pulleys was obtained from the following formula

$$L_b = \frac{\pi}{2}(d_1 + d_2) + 2x + \frac{(d_2 - d_1)^2}{4x} \quad (3.23)$$

Where,

L_b is pitch length of belt (mm)

d_1 is diameter of pulley mounted at motor (mm)

d_2 is diameter of pulley mounted at shaft (mm)

x is distance between centers of pulleys (mm)

Torque on the driver pulley

By using 1 hp electric motor at speed 1440 rpm, the torque may be generated in the driver pulley. The torque may be calculated from the Eq. (3.26)

$$P_1 = \frac{2\pi N_1 T_S}{4500} \quad (3.24)$$

Torque $T_S = (T_1 - T_2) \times D_1/2$ (3.25)

T_S = Torque on the smaller pulley (kg-m)

P_1 = Power of electric motor (1hp)

T_1 = Tension on tight side (kg)

T_2 = Tension on slack side (kg)

D_1 = Diameter of smaller pulley attached to the belt drive (m)

N_1= Speed of pulley (rpm)

Power required for driving the shaft

The torque and the power may be calculated by Eq. (3.27) and Eq. (3.26)

$$P_2 = \frac{2\pi N_2 T_L}{4500} \quad (3.26)$$

T_L = Torque to drive the shaft (kg-m)

T_L = (wt of the pulley x Radius of the driven pulley)

$$T_L = (T_1 - T_2)D_2/2 \quad (3.27)$$

Design the torque on the shaft

Based on the design of the machine horizontal stainless steel solid shaft was used. The shaft was subjected to combined twisting and bending moment.

$$P = \frac{2\pi NT}{4500} \quad (3.28)$$

Where,

P = Power of electric motor (hp)

T = Torque in kg-m

$$T = (T_1 - T_2)R \quad (3.29)$$

R = Radius of pulley attached to the shaft (m)

N = rpm

Tensions on belt drive (T_1 and T_2)

The belt transmission power between two pulleys, the tension generated at tight side and slack side of the belt is given by following equation

$T = (T_1 - T_2)R$

$$T_1/T_2 = e^{\mu\theta} \quad (3.30)$$

Where,

T_1 and T_2 are tension on tight and slack side (kg).

R is the radius of driving pulley

μ= coefficient of friction between belt and pulley (0.3)

θ= angle of lap of belt, radian

$$\sin\alpha = \frac{d_2 - d_1}{4x} \quad (3.31)$$

$\alpha = 4.834^0$

$$\theta = 180^0 - 2\alpha \quad (3.32)$$

θ= 2.97 rad

shaft was subjected to combined twisting and bending moment.

Bending moment (M) acting on the shaft is given by

$$T1+T2+W \quad (3.33)$$

Where,

T1=Tension on Tight side (kg)

T2=Tension on slack side (kg)

W=Weight of pulley (kg)

The resultant banding moment at point A and B is zero

Resultant bending moment at point C

M= banding moment in shaft, kg-cm

T_1 = tension in tight side of belt

T_2 = tension in slack side of belt

3.7.6.5. Diameter of the shaft

According to A.S.M.E. code, the bending and twisting moment are to be multiplied by factors Kt and Mt respectively, to account for shock and fatigue in

operating condition. Therefore, if the shaft is subjected to dynamic loading, equivalent torque and equivalent bending moment will become

Table 3.3: ASME code for shaft design

Type of load	Stationary shaft		Rotating shaft	
	K_b	K_t	K_b	K_t
Gradually applied load	1	1	1.5	1
Suddenly applied load, minor shock	1.5-2	1.5-2	1.5-2	1-1.5
Suddenly applied load heavy shock	……..	……	2-3	1.5-3

Equivalent torque is given by

$$T_e = \{(K_m \times M)^2 + (K_t \times T)^2\}^{0.5} \quad (3.34)$$

Where,

K_m = combind shock and fatigue factor for banding for gradually applied load (1.5)

K_t = combind shock and fatigue factor for torsion for gradually applied load (1.0)

Also we, know that

$$T_e = \pi/16.\, f_S d_S{}^3 \quad (3.35)$$

Where,

F_S = allowable share stress for stainless steel shaft, 1651 kg/ cm^2

d_S = shaft diameter

Considering factor of safety as 1.5

So the diameter of the shaft is $d_S \times 1.5$

CHAPTER IV

RESULT AND DISCUSSION

This chapter deals with the results of various experiments conducted to achieve the objectives of the present investigation. These include the physico-chemical properties of the annatto seeds and there extraction procedure with different extraction medium. Present chapter also deals with the description of theoretical design considerations of a machine for extracting the sindoor from annatto seeds. The research work was undertaken at the Department of Agricultural processing and Food Engineering, SVCAET and RS, FAE, IGKV, Raipur.

4.1 PHYSICO-CHEMICAL PROPERTIES

4.1.1. Physical characteristics

A Randomly selected sample of about 150 seeds was taken for the determination of physical dimensions (viz. length, width, thickness), The measured moisture content at the time of experiment was 4.45 (w.b.). The length, width and thickness were observed 4.81mm, 3.78 mm and 2.83mm respectively. Geometric mean diameter and sphericity were calculated by Eq.(3.1) and Eq.(3.2), respectively.

Table 4.1: Physical property of annatto seeds

S. No.	Physical properties	Range	Average ±SD	CV
1.	Length (mm)	4.18 - 5.52	4.81 ± 0.3	6.38
2.	Width (mm)	2.98 - 4.72	3.78 ± 0.3	10.33
3.	Thickness (mm)	2.18 - 3.4	2.83 ± 0.3	12.3
4.	Geometric mean diameter (mm)	3.37 - 4.02	3.63 ± 0.18	4.98
5.	Sphericity (%)	0.66 - 0.88	0.77 ± 0.04	6.42
6.	Bulk density(kg/m^3)	695.8 - 706.3	700.8 ± 4.03	0.57
7.	True density (kg/m^3)	1347.7 - 1351.8	1350.3 ± 1.9	0.14
8.	Porosity (%)	47.74 - 48.51	48.09 ± 0.2	0.6

The bulk density, true density and porosity of seeds are shown in Table (4.1). The frictional properties such as; angle of repose and coefficient of friction are shown in table (4.2).

Table 4.2: Frictional property of annatto seeds

Frictional properties	Range	Average ±SD	CV
Angle of repose (degree)	43.87 - 47.12	45.83 ± 1.4	3.065
Coefficient of friction			
Coefficient of static friction			
Glass	0.26 - 0.28	0.28 ± 0.01	3.86
Galvanized steel	0.3 - 0.32	0.31 ± 0.01	3.4
Rubber sheet	0.38 - 0.4	0.39 ± 0.011	2.9
Coefficient of kinetic friction			
Glass	0.34 - 0.37	0.35 ± 0.01	3.22
Galvanized steel	0.46 - 0.58	0.53 ± 0.05	9.34
Rubber sheet	0.58 - 0.69	0.63 ± 0.06	10.46
Plywood	0.27 - 0.35	0.33 ± 0.03	9.7

Thousand seeds volume was determined by toluene displacement method. The volume of thousand seed ranged from 37.1 to 37.6. The mean of thousand seed was 37.18 ± 0.20 and coefficient of variance was 0.54. From the table 4.2, the coefficient of variance is less than 15 which means there is significant difference between different replication.

4.1.2. Proximate Analysis of annatto seeds

Proximate composition viz., moisture, protein, fat, ash, crude fiber, carbohydrate were determined. Proximate composition of annatto seeds is presented in Table (4.3)

The moisture content of seed was 4.45% and standard deviation was 0.12. The seed contain higher level of crude protein 10.15% and standard deviation was 0.39. Total carbohydrate, fat, fiber and ash content was estimated 46.8 %, 3.73 %, 30.84 % and 4.13 % respectively and the standard deviation were 1.38, 0.13, 1.58

and 0.05, which was slightly similar to the result obtained by Dike *et al.,* 2016 and Valerio *et al*., 2015.

Table 4.3: Chemical composition of annatto seed

Nutrient	Average	SD	CV
Moisture	4.45	0.12	2.76
Crude protein	10.15	0.39	3.85
Fat	3.73	0.13	3.52
Ash	4.13	0.05	1.39
Fiber content	30.84	1.58	5.13
Total carbohydrate	46.8	1.38	3.01

4.2 Extraction of pigment from annatto seed

High end techniques e.g. microwave, ultrasonic, and supercritical carbon dioxide used to extract the pigments require more input cost. Extraction of pigment using different extraction medium may be economical compared to other techniques. Experiments were conducted to finalize the suitable extraction medium for the extraction of sindoor powder. The observations of extraction of sindoor (pigment) using different medium are presented in Table 4.4

Table 4.4: Pigment extracted from seed using different solvent

S.No.	**Solvent**	M_{seed}(g)	$V_{Solvent}$ (ml)	M_{Yield} (g/100g)
1.	Water	50	200	8.077
2.	Vegetable oil (coconut oil)	50	200	0.837
3.	Organic solvent			
a.	Acetone	100	400	7.1
b.	Ethanol	100	400	4.8
c.	Hexane	100	400	5.6
d.	Chloroform	100	400	7

All the extraction medium, except the vegetable oil were removed from the extract by evaporating the solvent on a water bath to obtain the sindoor powder.

Maximum dry powder (8.7%) was obtained using the water as extraction medium. From the table 4.4. It can be inferred that acetone extracted maximum sindoor powder (7.1%) among all the organic solvent. Minimum sindoor powder (4.8%) could be obtained using the ethanol as extraction medium. Sindoor powder obtained using chloroform and hexane is 7% and 5.6 % respectively. It was also observed from the experiment that, if the acetone extract of the seed kept idle for some time, part of the extracted pigment is separated from the soluble pigment as sediment. For further qualitative and quantitative analysis both the fraction were kept separate and the powder was obtained separately by evaporating the solvent.

The powder obtained from the soluble part denoted as acetone (I) and the sedimented was denoted as acetone (II). The results obtained through the experiments are similar to the Silva *et al* (2001). Pattanaik, *et al.,* (2016) reported lowest 3.01% yield in cold ethanol extract. Sylvia, *et al.,* (2013) reported that water was used as solvent: the yields obtained was 0.80% (Pressurized liquid extraction) and 20.1% (Low pressure solvent extraction), if ethanol is used as solvent : 17.5% (Pressurized liquid extraction) and 9.5% (Low-pressure solvent extraction). Mota, *et al.,*(2017) bixin is hardly soluble in oil so higher concentrations were impossible to obtain.

4.3 Qualitative phyto-chemical screening of different extract

The presence of various phyto-chemicals was determined in the powder of various extracts extracted using various extraction medium. Phyto-chemical compounds such as alkaloids, saponin, tannin, phenol, flavonoids, glycosides and terpenes were screened in the extract. Although, among these compounds alkaloids, phenolic compounds, flavonoids, saponins and tannins are important secondary metabolites and are responsible for medicinal values of the respective plant.

Natural pigment extracted from acetone, ethanol, hexane, chloroform and water were subjected to qualitative screening to detect the presence and/or absence of different groups of phytochemicals. Powdered samples of different extract were tested qualitatively with special reagents that produce characteristic colours changes with different categories of chemical constituents. Results of Phyto-chemical screening of different extracts of *B. orellana* are presented in Table 4.5.

Table 4.5: Phyto-chemical test of different extract

Extract / Phyto-chemical	Acetone	Acetone (I)	Acetone (II)	Ethanol	Hexane	Chloro-form	Water
Alkaloids	-	-	-	-	-	-	-
Terpenoids	+	+	+	+	+	+	+
Phenolics	+	+	+	+	+	+	+
Flavonoids	+	+	+	+	+	+	+
Tannin	+	+	+	+	+	+	+
Saponins	+	+	+	+	-	-	+
Glycosides	-	-	-	-	-	-	-
Carbo-hydrates	+	+	+	+	+	+	+

Qualitative phyto-chemical screening of pigment indicated the presence of terpenoids, phenolics, flavonoids, tannins, saponin, carbohydrates, in hydro-methanolic extracts of all the pigment extracted using different medium. Presence of phenolics, flavonoids and tannins in all samples as shown in table 4.5 is indicative. Alkaloid and glycoside was absent in all the extracted samples. Phyto-chemicals are chemicals derived from plants and the term is often used to describe the large number of secondary metabolic compounds found in plants. Similar work was done by Abayomi *et al.,* 2014, investigate the antibacterial activity of bixa orellana seed extract. Phytochemical screening show the positive result for saponin, tannins, terpenoids, carbohydrate and flavonoids in aqueous alkaline extract but test negative for alkaloids and resins.

4.4 Quantitative determination of phyto-chemical constituents

The various extracted pigment were subjected to quantitative analysis by standard methods. All the extracts which were prepared from the various organic solvents from seeds of annatto plants were analyzed for the most important phyto-chemicasls *viz.* flavonoids, phenols and saponins.

4.4.1. Quantitative determination of total phenolic contents

The total phenolic contents (TPC) of the samples analyzed using Folin–Ciocalteu's reagent are expressed in terms of gallic acid equivalent (GAE). Phenolic content of annatto extract, calculated from the calibration curve for different concentrations of gallic acid, using regression equation as represented in figure 3.15. The regression equation obtained from the calibration curve is y = 0.017x-0.040. The total phenolic content of the pigment extracted from water was 808.23 mg (GAE)/100 g. TPC of different extract was found 742.94 mg (GAE)/100 g, 596.47 mg (GAE)/100 g, 550.58 mg (GAE)/100 g, 455.88 mg (GAE)/100 g, 387.64 mg (GAE)/100 g and 301.76 mg (GAE)/100 g for acetone (II), acetone, hexane, chloroform, ethanol and acetone (I) respectively.

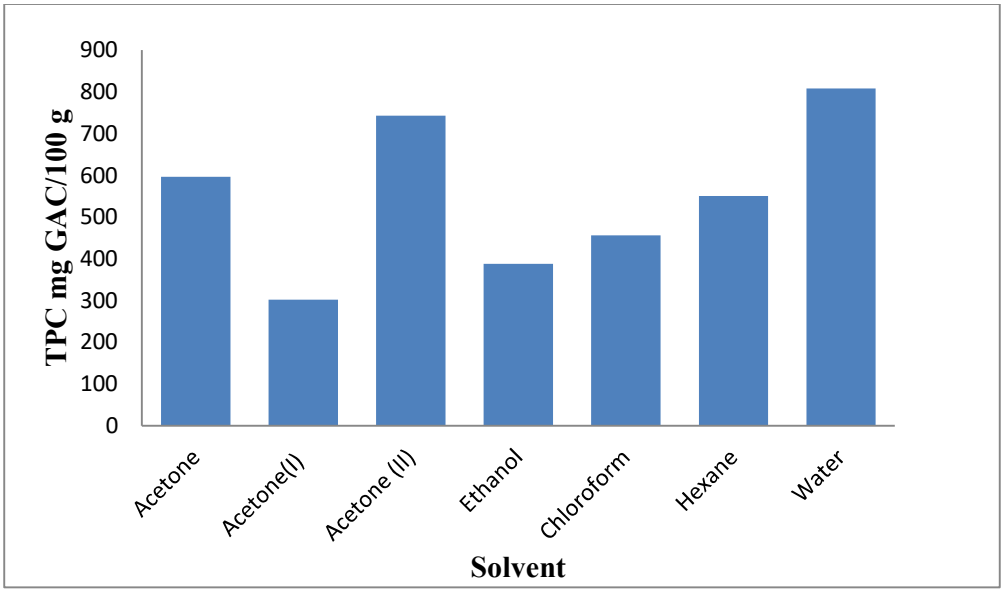

Fig 4.1: Effect of extraction medium on Total Phenolic Content

Our findings are similar to the results reported by previous researchers. Abdelwahab *et al.,* (2009) reported that the total phenolic content of any sample was different when extracted with different solvents. Ganju, *et al.*, (2014) reported that the phenolic compounds was present in all the extracts but in the aqueous extract the maximum amount of phenolic compounds (75.3 mg of GAE/g) was found. Water and aqueous ethanolic extracts shows the high contents of phenolic compounds (Dirar, *et al.*, 2018). The phenolic contents can be used as powerful indicators of the antioxidant capacity, which can be used as a preliminary screen

for any product when intended as a natural source of antioxidants in functional foods (Viuda-Martos *et al.* 2011).

4.4.2. Quantitative determination of total flavonoid contents

The total flavenoid content (TFC) of annatto extract, calculated from the calibration curve prepared using different concentrations of qurecetin. From the calibration curve show in fig 3.16, the regression equation obtained: y = 0.007x+ 0.142.

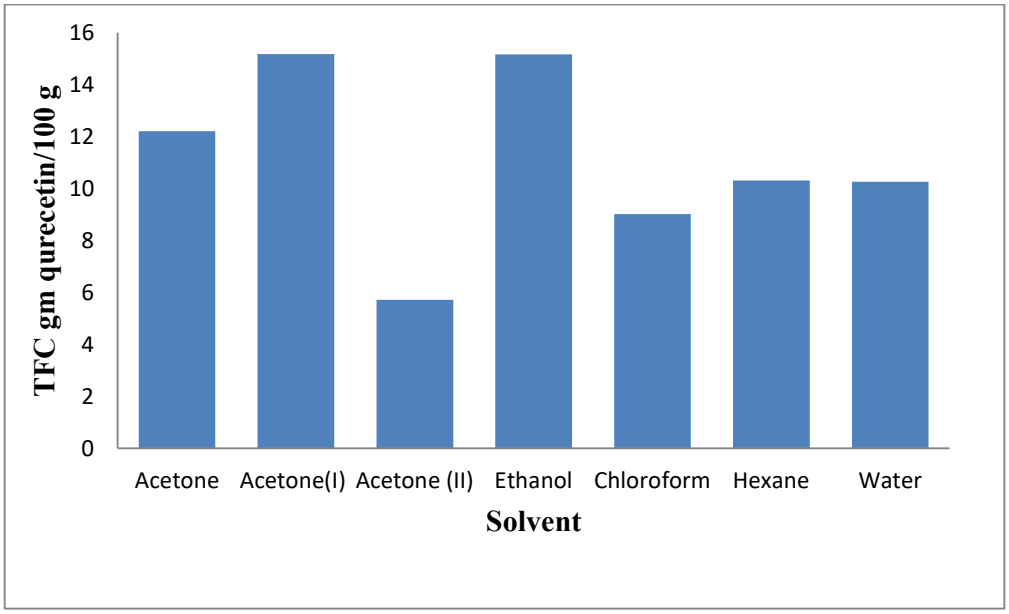

Fig 4.2: Effect of extraction medium on total flavonoid content

Total flavonoid content varied from 15.17g qurecetin /100g to 5.71 g qurecetin/100 g of extracted sindoor powder. The total flavonoid contents were higher in acetone (I) . TFC of different extract is found to be: acetone (I), ethanol, acetone, Hexane, water, Chloroform and acetone (II) was 15.17g qurecetin/100g, 15.15 g qurecetin/100g, 12.2 g qurecetin/100 g, 10.30 g qurecetin/100g, 10.25 g qurecetin/100 g, 9.01 g qurecetin/100 g 5.71 g qurecetin/100 g of extracted sindoor respectively.

Our findings are similar to those reported by the previous researcher. Cuong, *et al.*, (2016) reported TFC of annatto seed extract 5.19 ± 1.52 mg QE/g. Compared to other solvents, acetone extract showed higher TFC values (Dirar, *et al.*, 2018). The flavonoid contents can be used as powerful indicators of the antioxidant capacity, which can be used as a preliminary screen for any product

when intended as a natural source of antioxidants in functional foods (Viuda-Martos et al. 2011b) also Abayom, *et al.*, (2014) reported that in annatto extract flavonoid were found.

4.4.3. Quantitative determination of total saponin content

The saponin content of the samples was determined by double extraction gravimetric method described by Harborne, 2004. The saponin content of different extract are shown in table 4.6.The observations shows that saponin was present in all annatto extract, but in varied levels.

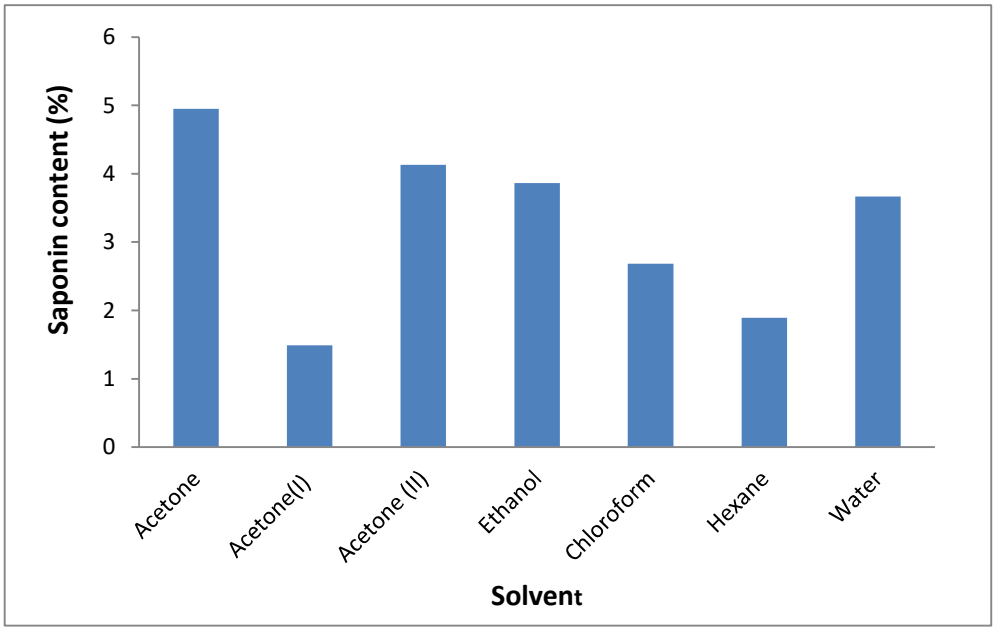

Fig 4.3: Effect of extraction medium on saponin content

The highest level of saponin content was observed in acetone extract (4.95%), with standard deviation 0.2 and coefficient of variance 5.3. In different extract medium, maximum saponin obtained with Acetone (4.95%). Minimum yield was recorded in Acetone(I) (1.48 %). In Acetone (II), Ethanol, Water, Chloroform and Hexane extracted pigment, saponin was 4.12%, 3.86%, 3.66 %, 2.68% and 1.89 % respectively.

Table 4.6: Total saponin content in sindoor powder extracted from different extraction medium.

S. No.	Annatto seed extract	Average Saponin content(%)	Standard Deviation	CV
1.	Acetone	4.95	0.2	5.3
2.	Acetone(I)	1.48	0.15	10.6
3.	Acetone (II)	4.12	0.005	0.13
4.	Ethanol	3.86	0.37	9.6
5.	Chloroform	2.68	0.14	5.5
6.	Hexane	1.89	0.14	7.7
7.	Water	3.66	0.1	2.9

Same result obtained by Ngo, *et al.*, (2017), showed that the best solvent for extraction of saponins was 50% acetone (754mg EE/g DW), followed by absolute methanol, ethanol, and 50% (v/v) of these solvents with water, also reported that water and absolute acetone had the lowest content of saponins. Previous studies also reported that different extraction solvents significantly affected the extraction efficiency of saponins (Wintola and Afolayan, 2011; Pasaribu, *et al.*, 2014).

4.5 Statistical analysis

The present experimentation were planned in complete randomized design (CRD) with three replication. The data was analyzed by applying one factor analysis using f-test at 1% level of significance. The result of statistical analysis for effect of solvent on yield of extract, saponin content, Phenol and flavonoid are summarized in table 4.7. The significance effect of treatment was judged with the help of F- test. The result of statistical analysis indicated that the yield of extract, saponin, phenol and flavenoid was significantly different from all other extracts at $p \leq 0.001$.

Table 4.7: Statistical analysis

Treatment(Solvent used for extraction)	Yield(gm/100gm seed)	Saponin(%)	Phenol (mg/100g)	Flavenoid (g/100g)
Acetone	7.167^{bc}	4.950^{a}	596.471^{cd}	12.200^{b}
Acetone I	-	1.488^{g}	301.765^{g}	15.179^{a}
Acetone II	-	4.130^{b}	742.941^{b}	5.714^{f}
Ethanol	4.833^{e}	3.863^{cd}	387.647^{f}	15.150^{a}
Haxen	5.6^{d}	1.893^{f}	550.588^{d}	10.307^{cd}
Chloroform	7.003^{c}	2.684^{e}	455.882^{e}	9.014^{e}
Water	8.003^{a}	3.663^{d}	808.235^{a}	10.250^{d}
Vegetable Oil	0.836^{f}			
F-test	S	S	S	S
C.D.	0.425	0.215	48.769	0.598
SE(d)	0.188	0.098	22.138	0.271

S- Significant

4.6 Conceptual design of machine for extraction of annatto seeds

In background of the above physical and chemical properties of annatto seed pigment a theoretical design has been proposed. Before designing the machine it was kept in mind that the machine should be small, easy to handle and can process small amount of seed at village level/cottage level.

4.6.1. Dimension of inner and outer cylinder

The dimension of inner and outer cylinder is based on the volume of seed which is extracted in each batch. Each batch consist of 5 kg of seed for extraction. On the basis of volume of 5 kg seed (7148.88 cm^3), the dimension of inner cylinder: Length 60 cm, diameter of inner cylinder is 26 cm. Seed to solvent ration was determined 1:4 on the basis of the results reported by koul, *et al.* (2003). The outer cylinder diameter is 42.8 cm and length is 67 cm. The shaft could be 77 cm in length according to length of cylinder.

4.6.2. Design of hopper size:

The hopper was designed in trapezoidal shape, using stainless steel and had a dimension of top of hopper is 28.32 cm length, 28.32cm width and 4 cm height which has an inlet opening of 7×7cm. In trapezoidal section the height of hopper is 12.7cm, top width: 28.32 and bottom width 7 cm. The capacity of hopper was 3.34 kg.

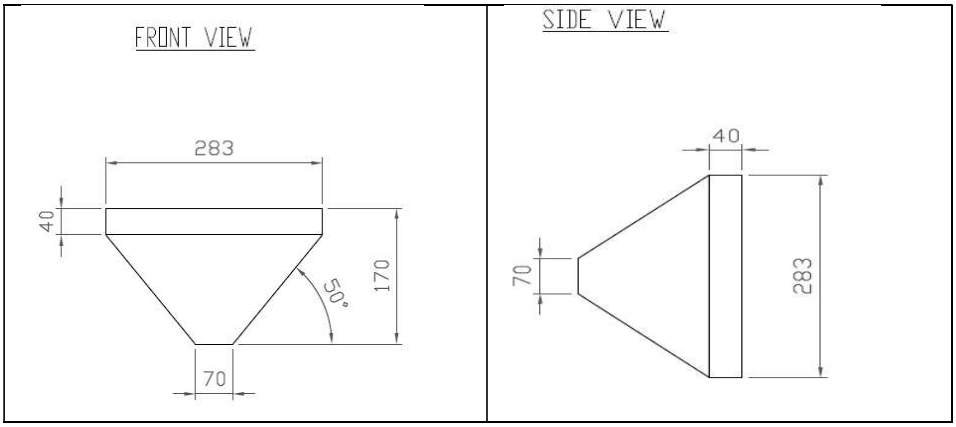

Front View

Side view

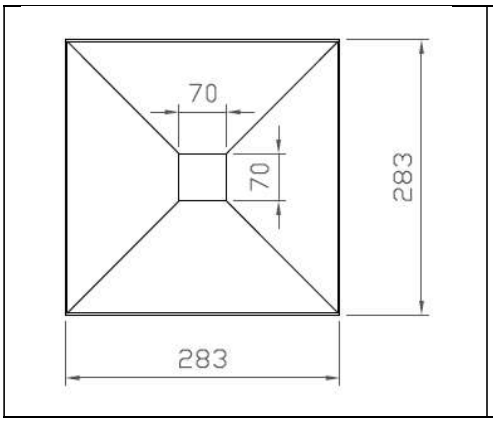

Top View

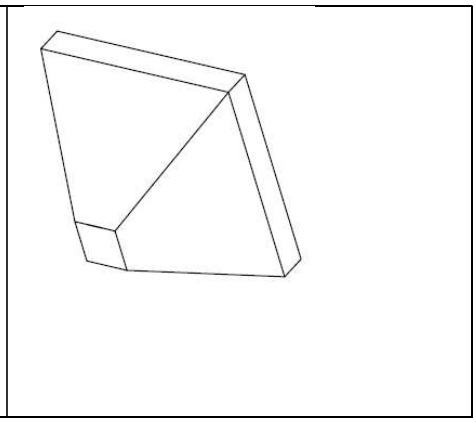

Isometric View

Fig. 4.4: Hopper Dimension

4.6.3. Design calculation

The machine should be designed on beach type and there design calculation is based on the basis of seed property. For accurate design, diameter, length and speed of pulley were taken.

4.6.3.1. Design of pulley size

The size of the pulley can be specified by the diameter of the pulley. It can be determined by the Eq. (3.22) mentioned in chapter III.

Table 4.8: Specification of pulley

S. No.	Description	Values
1.	Material for driver and Driven pulley	Mild steel
2.	Speed of driver pulley(rpm)	1440
3.	Diameter of driver pulley(mm)	132
4.	Speed of driven pulley(rpm)	760
5.	Diameter of driven pulley (mm)	250

(Standard table: Preferred pitch diamrter of pulley, Bhandari, 2007)

4.6.3.2. Length of the belt

Length of the belt for the pulleys was obtained from the Eq. 3.23 in chapter III

Table 4.9: Specification of Belt

S. No.	Parameter	Specification
1.	Center distance between driven and driven pulley(mm)	380.5
2.	Type of belt	B-Type V belt
3.	Length of belt (mm)	1370

4.6.3.3. Power requirement

Table 4.10: Description of various lode

S. No.	Description	Value
1.	Torque on the driver pulley (kg-m)	0.4973
2.	Torque on the driven pulley (kg-m)	0.9412
3.	Coefficient of friction between belt and pulley	0.3
4.	Angle of contect between belt and pulley (rad)	2.97

4.6.3.4. Design for diameter of horizontal shaft

Table 4.11: Design calculation of shaft

S.No.	Description	Value
1.	Torque on the shaft (kg-m)	0.942364
2.	Tension on tight side of belt (kg)	12.7742
3.	Tension on clack side of belt (kg)	5.2353
4.	Resultant banding moment on shaft (kg-m)	2.55395
5.	Equivalent torque on the shaft (kh-m)	3.9451
6.	Shaft diameter (mm)	12.7

Table 4.12: Approximate dimension of extraction machine

S. No.	Description		In mm
1.	Length of shaft (stainless steel)		770
2.	Diameter of shaft		12.7
3.	Length of inner cylinder		600
4.	Diameter of inner cylinder		260
5.	Length of outer cylinder		670
6.	Diameter of outer cylinder		428
7.	Dimension of solid cylinder in which nylon brush was fixed	Length	580
		Diameter	160
8.	Length of nylon brush		40
9.	Clearance space between brush and inner cylinder		10
10.	Tilt Angle of machine		5°
11.	Hopper –trapezoidal type with square top and base of sides 28.32 cm and 7 cm with 50° angle of slope.		170

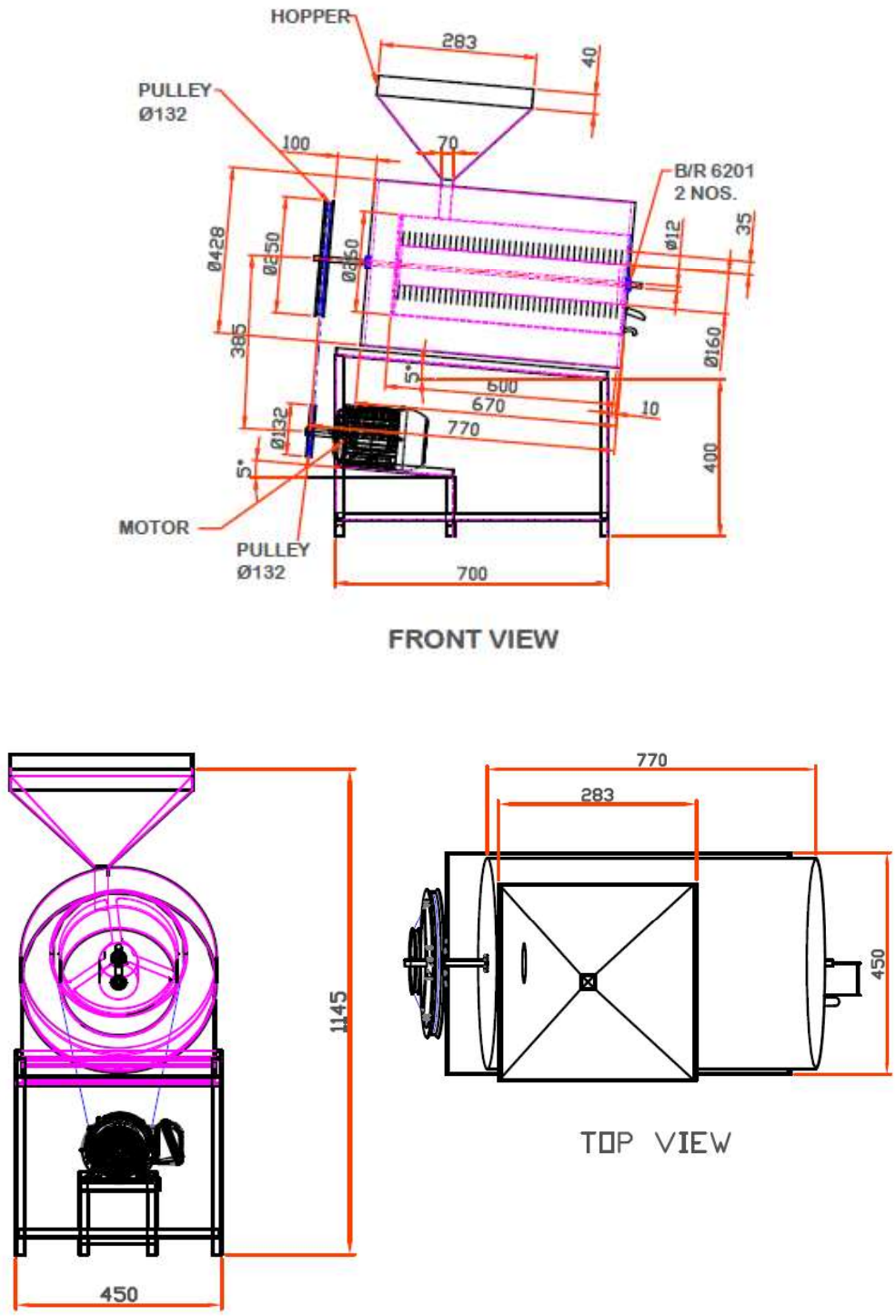

Fig 4.5: AUTO CAD designing of annatto seed extraction machine

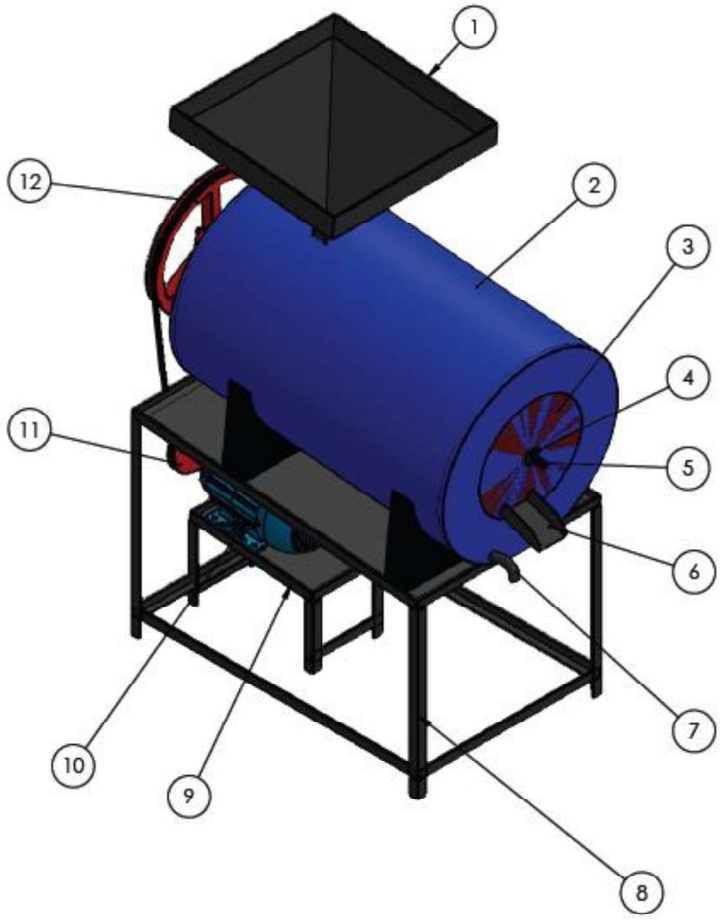

Fig 4.6: Isometric View of the annatto seed extraction machine

1 Hopper

2 Outer Cylinder

3 Inner Cylinder

4 Bearing

5 Shaft

6 Outlet for seed

7 Solvent outlet

8 Frame

9 Motor Base

10 1hp Electric motor

11 Motor Pulley

12 Shaft Pulley

CHAPTER V

SUMMARY AND CONCLUSION

SUMMARY

The *Bixa orellana* is a shrub or small perennial tree. It's belongs to family Bixaceae and the genus Bixa. *Bixa orellana* is firstly important for the reddish-orange color, which is obtained from the seeds. There was a different processes which applied to obtain annatto extract. In the indirect extraction process the solvent was used to extract pigment from annatto seeds and the solvent was subsequently removed. This produces highly concentrated extracts. Traditional methods of color extraction such as maceration is very time-consuming and recovery in powder form from solvent require much energy and time.

Traditional method also involve several processing steps and energy and is labor intensive. To overcome the issues related to traditional method, this research work is being focused on the development of small capacity extraction machine which can be used at local level to extract the pigment from bixa seed.

To fulfill these objective the physicochemical property of annatto seeds are determine. For the extraction of pigment, the different medium were used namely water, organic solvent (acetone, ethanol, chloroform, hexane) and vegetable oil. The seed and medium ratio were taken as 1:4. Phyto-chemical analysis (qualitative and quantitative analysis) of different extract was done. For design of small capacity extraction machine, the different parameter may be considered. The drawing of the extraction machine was prepared using Auto- CAD 2013 software. The machine consist of main frame, belt drive, motor and extracting chamber.

CONCLUSION

- The different physical property of seeds are determined by digital vanier calipers. The present analysis was carried out at 4.45 % moisture content of seeds. The average length, breadth and thickness of seeds was found to be: 4.81 mm, 3.78 mm and 2.83 mm. The geometric mean diameter was 3.63

mm and the sphericity of seed was 0.77%. The thousand seeds volume was 37.18 m^3.

- The bulk density, true density and porosity was also calculated for annatto seed. The average bulk density and true density of seed was 700.8 kg/m^3 and 1350.3 kg/m^3. There for the average porosity of seed was 48.09 %.
- The frictional property of seed was calculated in which the angle of repose of annatto seed was 45.83^0. The coefficient of friction (kinetic friction) is maximum in rubber sheet (0.63). The coefficient of kinetic friction for galvanized steel, glass and plywood were 0.53, 0.35 and 0.33 respectively. There mean static coefficient of friction for glass, galvanized steel and rubber sheet were 0.28, 0.31 and 0.39.
- In annatto seed the average value of crude protein, fat, ash, fiber content and total carbohydrate were 10.15 %, 3.73 %, 4.13 %, 30.84 % and 46.8 % respectively. The moisture content was 4.45 % (w.b.).
- The maximum extract yield could be obtained from water extract (8.077%). The yield obtained for different extract such as acetone, chloroform, hexane, ethanol and vegetable oil were 7.1%, 7%, 5.6%, 4.8% and 0.83% respectively.
- Alkaloids was not present in annatto extract. In different extract phenolic compound, flavenoid, terpenoids, tannin and carbogydrate are present. In acetone, acetone (I), acetone(II), ethanol and water extract saponin was present.
- The phenolic compound of different extract such as water 808.23 mg (GAE)/100 g acetone(II) 742.94 mg (GAE)/100 g, acetone 596.47 mg (GAE)/100 g, hexane 550.58 mg (GAE)/100 g, chloroform 455.88 mg (GAE)/100 g , ethanol 387.64 mg (GAE)/100 g and acetone(I) 301.76 mg (GAE)/100 g of extracted sindoor.
- TFC of different extract was found to be: acetone (I) 15.17 g qurecetin/100 g, ethanol 15.15 g qurecetin/100 g, acetone 12.2 g qurecetin/100g, Hexane 10.30 g qurecetin/100 g, water 10.25 g qurecetin/100 g, Chloroform 9.01 g qurecetin/100 g and acetone (II) 5.71 g qurecetin/100 g of extracted sindoor.

- The saponin present in Acetone, Acetone (II), Ethanol, Water, Chloroform, Hexane and Acetone(I) were: 4.76 - 5.13 %, 4.12 - 4.13 %, 3.6 - 4.12 %, 3.58 - 3.74 %, 2.57 - 2.78 %, 1.78 - 1.99 % and 1.37 - 1.6 %.
- In machine the diameter of cylinder was calculated by the bulk density of seed. Before designing, it was kept in mind that the machine should be small, easy to handle and can process small amount of seeds. So keeping all these thing in mind, we calculate the dimension of extracting chamber, which extract of 5 kg per beach.
- In machine, the dimensions of different part were: Inner cylinder length 60 cm, diameter 21.2 cm, outer cylinder length 67 cm, diameter 40 cm, length of shaft 87 cm, diameter of shaft was 1.27 cm, diameter of driver pulley 13.2 cm, diameter of driven pulley 25 cm.
- The electric motor (1hp) 1440 rpm was used. The speed of driven pulley was 760 rpm.

REFERENCES

Abayomi, M., Adebayo, A.S., Bennett, D., Porter, R. and Shelly-Campbell, J., 2014. In vitro antioxidant activity of Bixa orellana (Annatto) seed extract. *J. App. Pharm. Sci*, *4*.

Abayomi, M., Adebayo, A.S., Bennett, D., Porter, R., Campbell, J.S. and Dawkin, G., 2014. Phytochemical testing and in vitro antibacterial activity of Bixa orellana (Annatto) seed extract. *Br J. Pharm Res*, 4: 1387-1399.

Adnan, M., Hussain, J., Tahir Shah, M., Shinwari, Z.K., Ullah, F., Bahader, A., Khan, N., Latif Khan, A. and Watanabe, T., 2010. Proximate and nutrient composition of medicinal plants of humid and sub-humid regions in North-west Pakistan. *Journal of Medicinal Plants Research*, 4(4): 339-345.

Agarwal, P., Agarwal, N., Gupta, R., Gupta, M. and Sharma, B., 2016. Antibacterial activity of plants extracts against methicillin-resistant Staphylococcus aureus and vancomycin-resistant Enterococcus faecalis. *Journal of Microbial and Biochemical Technology*, *8*(5):404-407.

Ajiboye, B.O., Edobor, G., Ojo, A.O., Onikanni, S.A., Olaranwaju, O.I. and Muhammad, N.O., 2014. Effect of aqueous leaf extract of Senecio biafrae on hyperglycaemic and serum lipid profile of alloxan-induced diabetic rats. *International Journal of Diseases and Disorders*, *2*(1):59-64.

Akintunde, M.A., 2007. Development of a rice polishing machine. *AU J. Technol*, *11*(2): 105-112.

Alcazar-Alay, S.C., Osorio-Tobon, J.F., Forster-Carneiro, T. and Meireles, M.A.A., 2017. Obtaining bixin from semi-defatted annatto seeds by a mechanical method and solvent extraction: Process integration and economic evaluation. *Food research international*, *99*: 393-402.

Baba, S.A. and Malik, S.A., 2015. Determination of total phenolic and flavonoid content, antimicrobial and antioxidant activity of a root extract of Arisaema jacquemontii Blume. *Journal of Taibah University for Science*, *9*(4):449-454.

Bagade, S.H., Ikhar, S.R. and Vanalkar, A.V., 2014. Design, fabrication and Performance Evaluation of Polisher Machine of Mini Dal Mill. *Int. J. of Engineering Research and General Science*. 2: 2091-2730

Balasubramanian, S., Kumar, R., Singh, K.K. and Zachariah, T.J., 2013. Physico-mechanical properties of black pepper (Piper nigrum L.). *Journal of Spices & Aromatic Crops*, *22*(2).

Cardarelli, C.R., de Toledo Benassi, M. and Mercadante, A.Z., 2008. Characterization of different annatto extracts based on antioxidant and colour properties. *J. of Food Science and Technology*, *41*(9): 1689-1693.

Cheok, C.Y., Salman, H. A. K. and Sulaiman, R., 2014. Extraction and quantification of saponins: A review. *Food Research International*, 59: 16-40.

Chowdhury, A.I., Molla, A.I., Sarker, M., Rana, A.A., Ray, S.K., Nur, H.P. and Karim, M.M., 2006. Preparation of edible grade dye and pigments from natural source bixa orellenae linn. *Int J Basic Appl Sci*, *10*(4): 7-22.

Chuba, C.A.M., Silva, R.E.P., Santos, A.C. and Sanjinez-Argandoña, E.J., 2018. Development of a device to pulping fruits of Bocaiuva (Acrocomia aculeate sp.) for the communities that practice sustainable strativism. *Forest Res*, *7*(219):2.

Dike, I.P., Ibojo, O.O., Daramola, F.Y. and Omonhinmin, C.A., 2016. Phytochemical and Proximate Analysis of Foliage and Seed of Bixa orellana Linn. *International Journal of Pharmaceutical Sciences Review and Research*, *36*(2): 247-251.

Ezeonu, C.S. and Ejikeme, C.M., 2016. Qualitative and quantitative determination of phytochemical contents of indigenous Nigerian softwoods. *New Journal of Science*.

Ganju, K. and Ganju, E., 2014. Phytochemical Analysis of Seeds of Bixa orellana Linn. *Journal of Medical and Pharmaceutical Innovation*, *1*(3): 21-24.

Gbabo, A., Liberty, T.T. and Akingbala, A.S., 2013. Design, construction and performance evaluation of a bush mango juice and seed extractor. *International Journal of Engineering Research and Technology*, *2*(11): 2601-2608.

Gbasouzor, A.I. and Okonkwo, A.C., 2014. Improved mechanized fruit juice extracting technology for sustainable economic development in Nigeria. In *Proceedings book of the world congress on engineering and computer*

science. Lecture notes in engineering and computer science, WCECS. 22-24.

Giridhar, P., Venugopalan, A. and Parimalan, R., 2014. A review on annatto dye extraction, analysis and processing-A Food Technology Perspective. *Journal of Scientific Research & Reports*, 3(2): 327-348.

Gul, R., Jan, S.U., Faridullah, S., Sherani, S. and Jahan, N., 2017. Preliminary phytochemical screening, quantitative analysis of alkaloids, and antioxidant activity of crude plant extracts from Ephedra intermedia indigenous to Balochistan. *The Scientific World Journal*.

Gupta, P., 2016. Bixa Orenalla: A Review on its Phytochemistry, Traditional and Pharmacological uses. *World J of Pharmaceutical Sciences*, 4(3): 500-510.

Gupta, P., 2016. Bixa orenalla: A review on its phytochemistry, traditional and pharmacological uses. *World J. Pharm. Sci*, 4: 500-510.

Gyanwali, K., Dhungana, B., Shrestha, D., Das, G.K. and Dhungana, M., 2016. Design, Fabrication and Testing of Proso Millet De-husking Machine. In *Proceedings of IOE Graduate Conference*. 123-131.

Husa, N.N., Hamzah, F. and Said, H.M., 2018. Characterization and Storage Stability Study of Bixin Extracted from Bixa orellana Using Organic Solvent. *Int. j Materials Science and Engineering*, 358(1): 012035.

Hussain, J., Ullah, R., ur Rehman, N., Khan, A.L., Muhammad, Z., Hussain, F.U.K.S.T. and Anwar, S., 2010. Endogenous transitional metal and proximate analysis of selected medicinal plants from Pakistan. *Journal of Medicinal Plants Research*, 4(3): 267-270.

Irobi, O.N., Moo-Young, M. and Anderson, W.A., 1996. Antimicrobial activity of annatto (Bixa orellana) extract. *International Journal of Pharmaco-gnosy*, 34(2): 87-90.

Kapoor, V.P., Katiyar, K., Pushpangadan, P. and Singh, N., 2008. Development of natural dye based sindoor.

Khalil, E., Esoh, R., Rababah, T., Almajwal, A.M. and Alu, M.H., 2012. Minerals, proximate composition and their correlations of medicinal plants from Jordan. *Journal of Medicinal Plants Research*, *6*(47): 5757-5762.

Koul, V. K., Koul, S., Tikoo, C. L., 2003. Process optimization for extraction and purification of bixin from annatto. *Indian J of chemical technology*, 10: 545-547.

Kumar, S.N. and Thampi, N., 2015. Phytochemical screening and characterization of the bioactive compounds from the leaves of Hyptis suaveolens and Spathodea campanulata. *Journal of Chemical and Pharmaceutical Research*, 7(7): 840-850.

Madhu, M., Sailaja, V., Satyadev, T.N.V.S.S. and Satyanarayana, M.V., 2016. Quantitative phytochemical analysis of selected medicinal plant species by using various organic solvents. *Journal of Pharmacognosy and Phytochemistry*, 5(2): 25.

Mala, K.S., Rao, P.P., Prabhavathy, M.B. and Satyanarayana, A., 2015. Studies on application of annatto (Bixa orellena L.) dye formulations in dairy products. *Journal of food science and technology*, *52*(2): 912-919.

Math, R.G., Ramesh, G., Nagender, A. and Satyanarayana, A., 2016. Design and development of annatto (Bixa orellana L.) seed separator machine. *Journal of food science and technology*, *53*(1): 703-711.

Meena Devi. V. N., Ariharan, V. N., and Prasad, N., 2013. Annatto: Eco-friendly potential source of natural dye. *Int. Res. J. Pharm.* 4(6).

Mehta, A.A., Behera, L.K., Tandel, M.B., Jadeja, D.B. and Vashi, B.G., 2015. Efficacy of different oils used for the extraction of annatto colour from the seeds of Bixa orellana L. *Journal of Applied and Natural Science*, *7*(2): 828-831.

Morsy, N., 2014. Phytochemical analysis of biologically active constituents of medicinal plants. *Main Group Chemistry*, 13(1): 7-21.

Ngo, T.V., Scarlett, C.J., Bowyer, M.C., Ngo, P.D. and Vuong, Q.V., 2017. Impact of different extraction solvents on bioactive compounds and antioxidant capacity from the root of Salacia chinensis L. *Journal of Food Quality*.

Niveditha, V.R., Sridhar, K.R. and Balasubramanian, D., 2013. Physical and mechanical properties of seeds and kernels of Canavalia of coastal sand dunes. *International Food Research Journal*, 20(4).

Nobre, B. P., Mendes, R. L., Queiroz, E. M., Pessoa, F. L. P., Coelho, J. P., and Palavra, A. F., 2006. Supercritical Carbon Dioxide Extraction Of Pigment From Bixa orellana Seeds (Experiments and Modeling). *Brazilian Journal of Chemical Engineering*. 23(02): 251 – 25.

Olaniyan, A.M. and Obajemihi, O.I., 2014. Design, development and test of a small scale mango juice extractor. *Journal of Agricultural Science and Technology. B*, *4*(1): 1.

Olaniyan, A.M., 2010. Development of a small scale orange juice extractor. *Journal of food science and technology*, *47*(1): 105-108.

Nikam, M. P., Patil, S. R., 2018. Design and development of guava fruit pulper. *Int. J. of Recent Trends in Science and Technology*, : 2277-2812.

Pattanaik, L., Pradhan, S., Shaoo, N.K. and Naik, S.N., 2019. Extraction and rapid quantification of pure bixin from Bixa orellena L. *Indian Journal of Natural Products and Resources (IJNPR)[Formerly Natural Product Radiance (NPR)]*, *9*(4): 290-295.

Raddatz Mota, D., Pérez Flores, L.J., Carrari, F.O., Insani, E.M., Asis, R., Mendoza Espinoza, J.A., Díaz de León Sánchez, F. and Rivera Cabrera, F., 2016. Chemical characterization and quantification of the pigment extraction yield of seven mexican accessions of Bixa orellana.

Raghtate, A.S. and Handa, C.C., 2014. Design and fabrication of groundnut sheller machine. *IJIRST–International Journal for Innovative Research in Science & Technology*, *1*.

Rao, P. P., Jyothirmayi, T., Balaswamy, K., Satyanarayana, A., & Rao, D. G. (2005). Effect of processing conditions on the stability of annatto (Bixa orellana L.) dye incorporated into some foods. *J. of Food Science and Technology*, *38*(7): 779-784.

Rao, P.P., Satyanarayana, A. and Rao, D.G., 2002. Effect of storage on the stability of water soluble annatto dye formulation in a simulated orange-RTS beverage model system. *LWT-Food Science and Technology*, *35*(7): 617-621.

Rodrigues, L.M., Alcázar-Alay, S.C., Petenate, A.J. and Meireles, M.A.A., 2014. Bixin extraction from defatted annatto seeds. *Comptes Rendus Chimie*, *17*(3): 268-283.

Sangvikar, S., Malgaonkar, M., Sharma, C., Kumar, S. and Murthy, S.N., 2015. Comparative phytochemical screening of qualitative and quantitative parameters of Bixa orellana L. *World J. Pharm. Pharm. Sci*, 4: 1001-1017.

Savithramma, N., Rao, M.L. and Suhrulatha, D., 2011. Screening of medicinal plants for secondary metabolites. *Middle-East Journal of Scientific Research*, 8(3): 579-584.

Senguttuvan, J., Paulsamy, S. and Karthika, K., 2014. Phytochemical analysis and evaluation of leaf and root parts of the medicinal herb, Hypochaeris radicata L. for in vitro antioxidant activities. *Asian Pacific journal of tropical biomedicine*, 4: 359-367.

Shahid-ul-Islam, L.J. and Mohammad, F., 2016. Phytochemistry, biological activities and potential of annatto in natural colorant production for industrial applications–A review. *Journal of Advanced Research*, 7(3): 499.

Singh, J., Naik, R.K., Patel, S. and Mishra, N.K., 2016. Design and Development of Chironji (Buchanania lanzan) Decorticator. *Biosciences*, 1860.

Soetan, K.O. and Fafunso, M.A., 2010. Studies on the Proximate and Mineral Composition of Three Varieties of lablab beans (Lablab purpureus). *International Journal of Applied Agricultural Research*, 5: 291-300.

Solanki, R.C., Naik, S.N., Santosh, S. and Srivastava, A.P., 2017. Design, development and evaluation of neem depulper. *agricultural mechanization in asia, africa and latin america*, 48(4): 46.

Sonar, D. J., Chindhe, A. A., Phapale, J. N., Pansambal, S. N., Sabale, B. A., 2018. Design and Fabrication of Mango Pulp Extraction Machine. *Int. J. for Research in Applied Science & Engineering Technology,* 6: *2321-9653*

Srineeraja, P., 2017. Pharmacological Properties of Bixa Orellana–A Review. *Int J Sci Res*, *6*(7): 751-755.

Sylvia C. A. A., Osorio-Tobon, J. F., Carneiro, T. F., Meireles, M. A. A., 2017. Obtaining bixin from semi-defatted annatto seeds by a mechanical method

and solvent extraction: Process integration and economic evaluation. *Int. J. of Food Research.* 99: 393–402.

Taham, T., Cabral, F.A. and Barrozo, M.A., 2015. Extraction of bixin from annatto seeds using combined technologies. *The Journal of Supercritical Fluids*, *100*: 175-183.

Taham, T., Silva, D.O. and Barrozo, M.A., 2016. Improvement of bixin extraction from annatto seeds using a screen-topped spouted bed. *Separation and Purification Technology*, 158: 313-321.

Talpade, N.N., Pawar, V.S., Farooqui, A.S., Sontakke, M.D. and Syed, H.M., 2018. Evaluation of physicochemical composition of gardencress seed (Lepidium sativum L.) and black gram split (Vigna mungo L.). *IJCS*, *6*(2): 2790-2793.

Tarighi, J., Mahmoudi, A. and Alavi, N., 2011. Some mechanical and physical properties of corn seed (Var. DCC 370). *African Journal of Agricultural Research*, 6(16): 3691-3699.

Tavakoli, H., Rajabipour, A. and Mohtasebi, S.S., 2009. Moisture-dependent some engineering properties of soybean grains. *Agricultural Engineering International: CIGR Journal*.

Telrandhe, U.B., Lade, S.N., Burle, S.S., Dixit, S. and Kosalge, S.B., 2016. Pharmacognostic and Phytochemical Investigation on Seed of Bixa orellana Linn.;1(3): 2455-8664

Tunde-Akintunde, T.Y. and Akintunde, B.O., 2004. Some physical properties of sesame seed. *Biosystems Engineering*, *88*(1): 127-129.

Valerio, M. A., Ramos, M. I. L., Braga Neto, J. A., Macedo, M. L. R., 2015. Annatto seed residue (Bixa orellana L.): nutritional quality. *Journal of Food Science and Technology.* 35(2): 326-330.

Van Chuyen, H., Hoi, N.T.N. and Eun, J.B., 2012. Improvement of bixin extraction yield and extraction quality from annatto seed by modification and combination of different extraction methods. *International journal of food science & technology*, *47*(7): 1333-1338.

Van Chuyen, H., Thi Ngoc, N., Hoi & Eun, H., 2012. Improvement of bixin extraction yield and extraction quality from annatto seed by modification

and combination of different extraction methods. *Int. J. of Food Science and Technology*.47: 1333–1338.

Van Cuong, T. and Chin, K.B., 2016. Effects of annatto (Bixa orellana L.) seeds powder on physicochemical properties, antioxidant and antimicrobial activities of pork patties during refrigerated storage. *Korean journal for food science of animal resources*, 36(4): 476.

Vilar, D.D.A., Vilar, M.S.D.A., Moura, T.F.A.D.L., Raffin, F.N., Oliveira, M.R.D., Franco, C.F.D.O., de Athayde-Filho, P.F., Diniz, M.D.F.F.M. and Barbosa-Filho, J.M., 2014. Traditional uses, chemical constituents, and biological activities of Bixa orellana L.: a review. *The Scientific World Journal*.

Viuda-Martos, M., Ciro-Gomez, G.L., Ruiz-Navajas, Y., Zapata-Montoya, J.E., Sendra, E., Pérez-Alvarez, J.A. and Fernandez-Lopez, J., 2012. In vitro Antioxidant and Antibacterial Activities of Extracts from Annatto (B ixa orellana L.) Leaves and Seeds. *Journal of Food Safety*, *32*(4): 399-406.

Yousf, N., Nazir, F., Salim, R., Ahsan, H. and Sirwal, A., 2017. Water solubility index and water absorption index of extruded product from rice and carrot blend. *J. Pharmacogn. Phytochem*, *6*(6): 2165-2168.

APPENDIX-A

A-1 Calculation

Design of pulley size

$D_1 = 132$ mm

$1440/800 = D_2/132$

$D_2 = 237.6$

$D_2 = 250$ (Standard table: Preferred pitch diamrter of pulley, Bhandari, 2007)

Length of the belt

Center distance x = 350 mm

$$L_b = \frac{\pi}{2}(132 + 250) + 2(350) + \frac{(250-132)^2}{4(350)}$$

$L_b = 1309.98$

Standard length of the belt selected, $L_b = 1370$mm

Then the center distance between two pulley is:

x = 380.5 mm

Torque on the driver pulley

$$1 = \frac{2\pi(1440)T_S}{4500}$$

We use 1 hp electric motor , the torque generated by electric motor at speed 1440 rpm is $T_S = 0.4973$ kg-m

Also, $T_S = (T_1 - T_2)\, r_1$

$T_1 - T_2 = 3.7674$kg

Power required for driving the shaft

$$P_2 = \frac{2\pi N T_L}{4500}$$

T_L = Torque to drive the shaft

$T_L = (T_1 - T_2)\, r_2$

$T_L = 3.765 \times 0.25$; $T_L = 0.9412$ kg-m

$P_2 = 0.998$ hp

$T_L = 941.25$kg-mm

T_L = (wt of the pulley x Radius of the driven pulley)

W= 7.53 kg

Design for diameter of horizontal shaft

Torque on the shaft

$T = P \times 4500/2\pi N$

T= 94.2364 kg-cm

T=9.373 N-m

Tensions on belt drive (T_1 and T_2)

The belt transmission between two pulleys

$T_1/T_2 = e^{\mu\theta}$

Where,

μ= cofficient of friction between belt and pully (0.3)

$\sin\alpha = \frac{d_2 - d_1}{4x}$

$\alpha = 4.834^0$

$\theta = 180^0 - 2\alpha$

θ= 2.97 rad

T_1-T_2= 3.7674kg

So, the tension on tight side of belt and tension on slack side of belt is:

T_1= 5.2353 kg and T_2=12.7742 kg

Banding and twisting moment on horizontal shaft

T_1+T_2+W

5.2353+12.7742+7.53

25.5395 kg

Resultant bending moment at point C is M = 255.395 kg -cm

T_e=394.51 kg-cm

$T_e = \pi/16.\, f_s d_s^{\,3}$

d_s =0.8473 cm

Considering factor of safety as 1.5

d_s =0.8473*1.5

d_s =1.27 cm

APPENDIX-B

B-1 Approximate dimension of extraction machine

S. No.	Description		In mm
1.	Length of shaft (stainless steel)		770
2.	Diameter of shaft		12.7
3.	Length of inner cylinder		600
4.	Diameter of inner cylinder		260
5.	Length of outer cylinder		670
6.	Diameter of oute cylinder		428
7.	Diamension of solid cylinder in which nylon brush was fixed	Length	580
		Diameter	160
8.	Length of nylon brush		40
9.	Clearance space between brush and inner cylinder		5
10.	Tilt Angle of machine		5°
11.	Hopper –trapezoidal type with square top and base of sides 28.32 cm and 7 cm with 50° angle of slope.		170

APPENDIX-C

C-1 ASME code for shaft design

Type of load	Stationary shaft		Rotating shaft	
	K_b	K_t	K_b	K_t
Gradually applied load	1	1	1.5	1
Suddenly applied load, minor shock	1.5-2	1.5-2	1.5-2	1-1.5
Suddenly applied load heavy shock	……..	……	2-3	1.5-3

RESUME

Name : Jyoti Patel

Date of birth : 25-NOV- 1995

Present Address : Room No. 09, Godawari Girls Hostel, V. C. Campus, Collage of Agriculture, IGKV, Raipur (C.G.) Pin – 492012

Phones : 8770002364

E. mail : Jyotipatel01125@gmail.com

Permanent address : Village- Arsipali, Post- Naurangpur, Tah.and Dist- Raigarh (C.G.) Pin- 496001

Academic Qualification :

Exam/Degree	Year	University/Institute
B.tech. (Agri. Engg.)	2017	Indira Gandhi Krishi Vishwavidyalay, Raipur (C. G.)
12th	2013	Chhattisgarh Bord of Secondary Education, Raipur (C.G.)
10th	2011	Chhattisgarh Bord of Secondary Education, Raipur (C.G.)

Jyoti

Signature