CHAPTER - II

REVIEW OF LITERATURE

Draught animal is a reliable and dependable source of power in Indian agriculture. Animal drawn implements and vehicles have been an important part of rural India involved in different farming operations like ploughing, sowing, inter-culture, threshing, water lifting and transporting farm produce. Growth of mechanisation in Indian agriculture outpaced thereby reducing the role of animal power. Annual use of animals is far below optimum, making their maintenance uneconomical solely on the basis of farm operations. To utilise this source of power, additional uses need to be found out. Using camel in rotary mode of operation to enhance the use of animal power seems to be the need of hour. Power output from an animal is a combination of factors like; body weight, duration and amount of load applied, physiological responses under the load, work rest cycles and environmental conditions.

Selection, development and the performance evaluation of matching gadgets for rotary mode of operation is the most important factor for proper utilizing the animal power. The matching gadgets should be found out on the basis of local needs and power requirements. For this purpose technical standrization for selection or development of matching gadgets for rotary mode of operation is needed.

Present work deals with study on development of rotary power transmission system as well as selection, development and performance evaluation of matching gadgets for camel powered rotary mode of operation. The review pertinent to this study is presented as under

- Use of draught animals
- Systems for harnessing draught animal power
- Draught measurement systems
- Draughtability of animals
- Work rest cycles
- Fatigue Assessment
- Traditional rotary mode applications
- Modern power transmission systems for rotary mode
- Matching gadgets for rotary powered transmission system

2.1 Annual Use of Draught Animals

Mechanisation of agriculture in India resulted in a number of operations being performed by tractor or other power operated machines replacing human or animal power. Easy availability along with very high capacity of mechanical power resulted in reduced work for animals. Annual utilisation of draught animals in different states and regions varies greatly. The draught animals are mainly used for ploughing, sowing, interculture, carting, water lifting, cane crushing and oil expelling operations. The annual use of animals is high in the areas where the intensity of cropping is high, fodder crops are grown and the village is away from town or tar-macadam road and electricity is either not available or the supply is not regular. Wherever the electricity and roads are available the farmers prefer to use electric power for water lifting, maize sheller, battery charging, cane crushing, chaff cutting etc. Studies in different part of country indicate that the annual use of draught animals is far from optimum.

A survey in Punjab revealed that bullocks were used mainly for transportation, seedbed preparation and sowing (Anonymous 1988a). Annual bullock use varied from 447-1251, 191-1224 and 329-710 hours for bullock farm, tractor farm and marginal farm respectively. Seedbed preparation, sowing and farm produce transport were major uses during the peak season. It was suggested that bullocks use should be increased by engaging them in other possible operations like harvesting, spraying, fertilizer application, weeding and rotary application.

Srivastava and Srivastava (1998) reported that bullocks were used maximum in the month of May accounting for 25.59 per cent of the total 660 hours in a year. It was also reported that about 15 per cent time was consumed in off farm activities.

Draught animals are major source of motive power for majority of farmers in India. Bullocks, buffaloes, camels, horses, mules and donkeys are common draught animals. These animals perform different field operations and are also used for rural transportation. The draught animals supplied 14.5 per cent of total farm power in India (Singh, 1999).

Anonymous (2000a) reported that bullocks were the only draught animals used in the Bhopal area. Their utilisation was very low 238, 285 and 319 hours per pair per year in three different villages. The bullocks were used mainly 71.99, 19.33 and 13.73 per cent in tillage, sowing and transport operations respectively.

Anonymous (2000b) found that 73 per cent of the bullocks were used for less than 40 per cent of their capacity whereas only 3.28 per cent were used for more than 60 per cent of their capacity.

Blade harrowing, ploughing, sowing, transports and interculture operations were the main uses. April-May, July-August and October were busy months and February was the leanest month.

Anonymous (2000c) reported that average annual use of bullocks in Rewari region was 400-500 hours. The bullocks were found to be used for 67.3, 12.6 and 20 per cent in tillage, transport and sowing respectively. Optimum use of draught animal power for 2500 hours was suggested. Further they reported that December to February was a lean period. In September, October and November there was a rise in their use. This use increased in the months of June, July, October and November due to their utility in tillage and sowing operations.

Wilson, (2001) studied effects of draught animal power on crops, livestock, people and the environment. He conclude that, households owning draught animals or having ready access to draught animals had greater crop yield and this can undoubtedly contribute to higher incomes and to food security.

Karangkar *et al*. (2008) shows that draught animals are an important source of power for millions of farmers of developing country. Efforts to improve draught animal productivity must view the situation from a farming system's perspective and adopt multi-disciplinary engineering aspects. Measurement of animal performance is needed for research into all these aspects and methods of varying sophistication are described.

Anonymous (2010) reported that total livestock population has increased from 485.0 million to 529.7 million during inter-censual period from 2003 to 2007 indicating a growth rate of 9.2 per cent. But camel population has decreased from 632,000 to 515,000 with a total declination rate of 18.2 per cent during this period.

Thus, it could be seen that the animal power is still being underutilized. The increase in mechanization may be the reason for underutilization.

2.2 Systems for Harnessing Draught Animal Power

Animals are being used in different agricultural operations and transportation right from the beginning of civilization. The animal power can be harnessed by different methods mainly depending upon type of animal and operation. This section deals with different possible ways to harness the animal power.

Bhatnagar *et al* (1991) evaluated three types of traditional camel harnesses. Camels worked comfortably with all the three harnesses while exerting a drought of 10 percent of their body weight

but at 12 per cent draught level, Bikaneri harness was found uncomfortable on the back of the camel due to the excessive rubbing action of the harness. On modification of the chain alignment system in the Bikaneri harness, camels were able to work up to 12 per cent draught but further improvement is not possible due to the discomfort to the animal. The camels worked up to draught of 14 per cent body weight for 6 hours with a rest of hours around mid day with Rewari harness. Camels could work up to a draught of 18 per cent of body weight for six hours in two sessions with a rest of two hours. Animals were able to work up to 20 per cent of draught with this harness. But camel exhibited symptoms of fatigue after two hours.

Kumar (1991) studied different systems by which animal power could be harnessed to develop a prime mover that could be used to operate different agro processing machines. These were hydraulic system, plank and ratchet system, drum rope system, hexagonal pulley system, two planks system and geared system. These systems are described as under.

2.2.1 Hydraulic system

The system consists of a number of rubber or leather bags filled with water. These bags are placed one after another making a circular track. Animals walk continuously on the above track. The bags are connected to a cylinder-piston system (Fig.2.1). The weight of moving animal creates the pressure difference that drives the piston. The piston imparts motion to a crank which converts this motion to rotary motion. As the body weight of animal creates the pressure difference in the water tubs so animal without hump can also be gainfully employed. Animals can work for longer period of time but very high precision is required to manufacture such a leak proof system and it is very costly. The output from the system for bullock has been estimated as 0.245 hp that is also very low as compared to average output of a bullock of 0.5 hp.

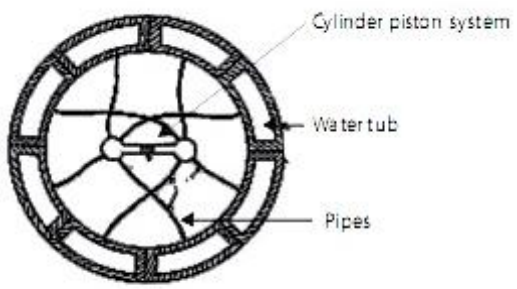

Fig. 2.1 Hydraulic system

2.2.2 Plank and ratchet system

The animals walk over wide plank whose lower end rests on ground and upper end is attached to a ratchet through pulley (Fig. 2.2). The weight of the animal forces the plank downwards, the rope and pulley transmits this motion to the ratchet. The ratchet is connected to a shaft. A number of such planks are arranged to make a circular path, on which animal walks and thus impart continuous movement into the ratchet. The ratchet imparts this motion to the cylinder from where it can be used as prime mower. After the animal gets down a particular plank a spring wounds the rope over the ratchet again. Body weight of animal is used to push the plank downward. Animals can work for longer period of time. The output from the system has been estimated as 0.9 hp from one pair of bullocks. Initial cost of this system is high. It may require some training for the animal to walk over such inclined plank.

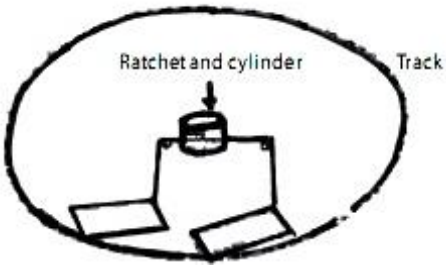

Fig. 2.2 Plank and ratchet system

2.2.3 Drum rope system

This device has cylindrical drums rotated by unwinding of a previously wound rope (Fig. 2.3). The animal walks in a straight path unwinding the rope tied to yoke on its neck, thereby rotating the drum. It is simple to operate, easy to manufacture and efficient. The cost is also low but it has two major drawbacks; first when the rope is unwound how it will be rewound and second the returning animal doesn't contribute to productive output. The problem of unwound rope may be solved by using two cylinders or some other mechanical means. The output of the system was reported satisfactory.

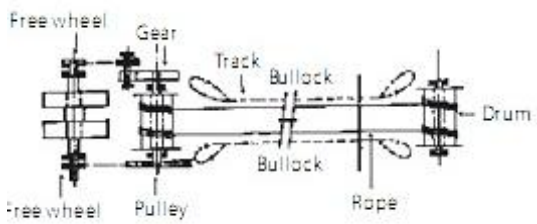

Fig. 2.3 Drum rope system

2.2.4 Hexagonal pulley system

This device consists of chain and pulleys. The pulleys are mounted on pillars making a hexagon (Fig. 2.4). The pulleys are rotated, in horizontal plane by a chain passing over the six pulleys. A long beam connected to the chain through a link. The animals are hitched to a long beam and move in a circular track outside the hexagon. One of the pulleys acting as main pulley transmits the power for productive use in the machines. Sagging of chain is a major drawback of this system. A gear box is also needed for stepping up the speed of the output shaft to suit the agro processing machines to be operated.

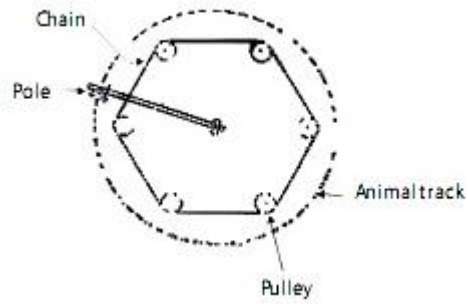

Fig. 2.4 Hexagonal pulley system

2.2.5 Two planks system

The device consists of two planks, made to swing about a transverse axis. The planks are connected to the pulleys as well as to each other so that both of them do not come down or go up simultaneously (Fig. 2.5). Diagonal ends of the planks go down or come up simultaneously, like natural situation of walking of a four footed animal, in which the total weight of animal at any time is supported by the diagonally opposite legs and their centre of gravity remains at the centre of the diagonal thus maintaining equilibrium while walking quickly. Animals are allowed to stand in such a way that its two right legs rest on one plank and the two left legs rest on another plank. Animal is required to be trained as initially it may fall from the planks. The power developed from one pair of bullocks is 0.9 hp.

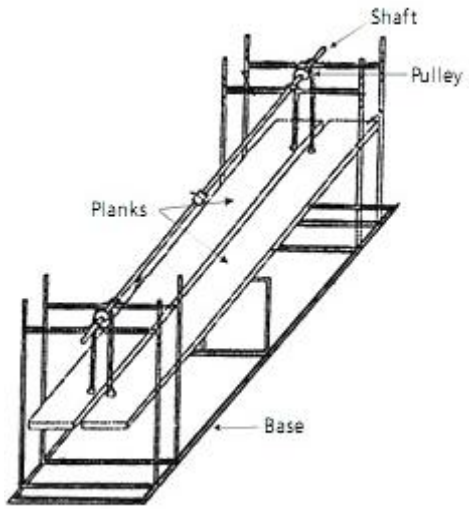

Fig. 2.5 Two planks system

2.2.6 Rotary gear system

In animal powered rotary gear system, animal moves on a circular path, the tractive force developed through the neck is utilized to drive a gear system, which converts the horizontal rotary motion of the walking animals into vertical rotary motion. This method is traditionally used in cane crushing, Persian wheel and oil expellers, which require low speed and very high torque. This low speed if stepped up can be utilized to operate agro-processing machines (Fig. 2.6).

On comparing the above discussed systems it can be observed that in hydraulic system and inclined plank system, the body weight of animal is used so animals can work for longer period of time. But very high precision requirement in manufacturing as well as higher initial cost makes them unsuitable. Drum rope method is simple, easy to fabricate, efficient and low cost. But returning animal does not contribute in productive output. The hexagonal pulley system is quite simple, but has practical difficulties like sagging of chain. Two planks system also uses body weight of animal and requires training to the animal but chances of falling of animals from planks are there. The animal powered power transmission unit is most efficient means of harnessing draught anima power in rotary mode of operation.

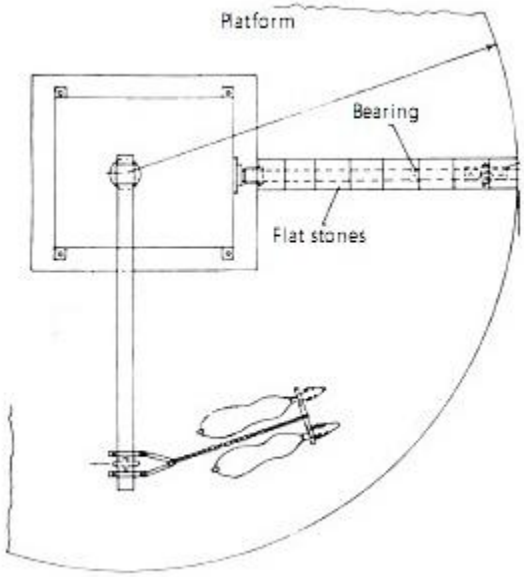

Fig. 2.6 Rotary gear system

2.3 Draught Measurement System

Sharma *et al.* (1987) designed, developed and tested a draught measuring mechanism for conventional single bullock cart that can be used to measure draughtability, speed, horse power and work done by draught animals under different load conditions. The regression equation developed on the basis of the study can be used to predict speed, pull, horsepower developed, and work done by the buffalos under any pay load condition.

Thakur *et al.* (1989) designed an animal loading device that consisted of a flywheel mounted on the end of output shaft, a flat canvas belt 5 mm thick surrounded the fly wheel and was attached to swing arm of the device. A known weight used for balancing the arm was suspended at one end while at the other end a spring dynamometer was mounted between the swinging arm and base plate. The arm was made to move in the vertical plane and could be locked by the help of a nut.

Pudjiono and Mcmillan (1994) developed a loading device for measuring the drawbar performance of animals and small tractors. A disc brake was chosen as energy absorption device because of good heat dissipation. Torque generated was insensitive to the variation of brake conditions such as temperature and rotational speed as well as the absence of self-generating action. Hydraulic force cell fitted with pressure gauge was used as force measurement unit. A screw actuator with a fine thread was used to control the load with a hand wheel.

2.4 Draughtability of Animals

Draught animals are living source of energy and large number of factors affects their traction power. Age, feeding, health, training, mood of the animal, the degree of familiaring of operator with animal as well as rhythm in which labour and efficiency is required, along with environmental factors like temperature, humidity, season and the time of the day affect the ability of animal to exert power. Following section deals with studies on traction power of draught animals.

2.4.1 Draughtability of animals in linear mode

The draught animal can produce tractive effort equal to $1/10^{th}$ of its body weight for a period of 10 hours in a day, FAO (1972). For short duration of time, more pull could be developed at lower speed too.

Devanani (1981) reported that bullocks could develop draught equivalent to one fifth to one sixth of their body weight. He further reported that maximum theoretical pull that an animal could develop when moving on level surface with a uniform speed was18 per cent of body weight.

Rautaray and Srivastava (1982) evaluated field performance of cross breed (Red Dane x Sahiwal) bullocks on black soil during tillage operation in summer. It was found that the bullocks developed draught equal to 12.9 per cent of their body weight within the speed range of 1.77-2.55 km/h for seven hours of work without abnormal change in their physiological responses.

Camel was found more power efficient animal as it produced more draught power than any other domestic animal with a possible exception of horse. The camel could maintain a sustained pull of approximately one-fifth to one-seventh of its body weight at a speed of 1 m/s (Wilson, 1984).

Maurya (1985) found that heavy camels (weight 370 kg to 600 kg) could produce 0.6 to 1.1 hp at low speed and 0.5 to 0.9 hp at high speed, respectively. He also found that the draught capacity of camel was 27 per cent to 40 per cent of body weight which ws better than other draught animals.

Upadhyaya and Madan (1985) reported that dynamics of work in relation to morphological and body configuration of draught animals revealed that the limb movement and body acceleration varied and the work performance was affected by both style of walk and stride strength. The ox having a barrel shaped and muscular limb attachment accelerates body mass slowly. Even with the maximum effort the ox is unable to move its body fast enough to match the speed of a horse. A heavy draught buffalo shows low acceleration of body mass but it possesses tremendous pulling/load carrying capacity. Horses and ponies have the greatest capacity to accelerate the body mass, hence they attained greater speed.

Maurya and Devadattam (1986) tested two Jersey x Red Sindhi bullocks and found that the bullocks could develop draught up to 16-17 per cent of their body weight while working for 6 hours a

day for several days in hot climatic conditions without showing any sign of permanent fatigue. Further they found that the power output and speed of bullocks did not drop appreciably with the working time. A draught of 80 kg per pair of bullock was found optimum to obtain a fairly uniform power of one hp at a speed of 3.35 km/h. Physiological responses of bullock showed significant difference and ambient temperature played a major role in their increment. Further they reported that there was no significant difference in the power output of crossbreed and local bullocks. The power output differed very significantly between the draughts and the seasons. The power output was higher at higher draughts during summer season. Perusals of change in physiological parameters of bullocks during work showed that pulse rate and body temperature were significantly higher during summer season.

Anonymous (1986) stated that most animals could exert a draught of 10 to 14 per cent of their body weight while working at a speed of 2.5 to 4.0 km/h. It was also reported that donkey could produce draught of about 15 to 20 percent of their body weight. The duration of work which animal would sustain their normal tractive effort was important in determining their effectiveness as power source for transport. It was suggested that the duration of work for ox, horse, Donkey and camel was 4 to 6, 6 to 8, 3 to 4 and 6 to 8 h/ day, respectively.

Kachru *et al.* (1987) conducted trials to study the draught stress under unfavourable climatic conditions. It was observed that in order to ensure maximum output from draught animals their ideal working period should be scheduled in such a way that animals are not exposed to extreme hot or cold.

Thakur *et al.* (1987) reported the power output of buffaloes remained constant when working at draught lower than 10 per cent of body weight. Power output at higher draughts (10, 13, 17 per cent of body weight) decreased steadily by about 14, 12 and 9 per cent after 2.5, 2 and 1 h. of work respectively. They concluded that respiration rate and rectal temperature of buffaloes increased with increase in air temperature and relative humidity. There was 52.5 per cent increase in respiration rate during first hour of ploughing. It was concluded that for the same kind of work thermal stress imposed extra physiological load on buffaloes. 7 per cent to 15 per cent decrees in speed was also observed in speed in 3 hours operation.

Anonymous (1989) assessed the draught capacity of camel in sustained working. Draught varied from 8 to 20 per cent of the body weight of camels. Camels were found to work comfortably up to draught level of 16 per cent of body weight without showing any physical sign of fatigue. Physical sign of fatigue was observed between the draught levels of 18 to 22 per cent of body weight of the camel. It was also reported that the camel could be employed to work in two sessions of three hours duration with a rest period of two hours between successive sessions.

Srivastava (1989) reported that draught power of an animal depends on the species, breed, sex, size, body weight, nutrition and health, training for work and terrain condition. Performance of different animals in different seasons under sustained working condition of 6 to 8 hours is presented in the Table 2.1.

Table: 2.1 Performances of different draught animals

Animal	**Draught equivalent to per cent of body weight**		
	Summer	**Winter**	**Duration of work, h**
Bullocks	12	14	7
Male buffaloes	10	12	6
Camels	15	16	7
Donkeys	32	34	6

Yadav and Srivastava (1993) conducted trials in summer during March to May when the ambient temperature and humidity were 27-42^{0}C and 12-25per cent respectively. Winter trials were conducted during November to January when the ambient temperature and humidity were 13-28^{0}C and 25-55 per cent respectively. The animals were loaded to draught level range of 8 to 14 per cent of their body weight, but the animals were fatigued when the draught load was more than 12 per cent. At higher draught the walking speed of the animals had lowered. Maximum power and energy output per day was obtained at draught equivalent to 12 per cent of body weight. Maximum power and energy were available at 14 per cent of body weight during winter. At draught of 15 and 16 per cent of body weight animal fatigued and score was more than 20. They concluded that under sustained working condition bullocks could be utilised for 7 hours of actual work.

Anonymous (2000a) reported that physiological parameters had positive correlation with the ambient temperature and negative correlation with relative humidity. Physiological parameters like respiration rate, pulse rate and body temperature increased, but the steepness in rise and fall of respiration rate was more. Bullocks could be used in linear mode of operation for 7 hours in two shifts at payload of 12 per cent of body weight. However at 14 and 16 per cent of body weight the animals were not able to recover even after 2-3 hours of rest. The maximum energy output was observed at 12 per cent body weight in winter and summer season on both pairs of bullocks. The optimum value of power and speed in cool, hot and hot-humid climates at 14 per cent of body weight draught were 0.75, 0.725, and 0.71 kW and 2.5, 2.25 and 2.15 km/h respectively. This indicates that optimum draught for an average pair of Nagori bullocks was 14 per cent of its body weight. The average speed and power

output of bullocks were found to be higher in cool climate than in hot or hot-humid climates. The variation in speed and power output of bullocks depends on the duration of work and rest pause given after 2 h of work and rest provided between two working sessions.

Verma and Mathur (2002) concluded that at the light draught (up to 14 per cent of body weight) the camel can work for 7-8 hours per day. At the draught of 18 per cent of body weight, the camel worked for 6 hours per day. At draught beyond the camel should be operated 5-6 hours per day providing the long breaks between the work sessions. However, at draught of 24 per cent of body weight it should not be operated continuously for more than 2 hours and at draught 26 per cent of body weight it should not be operated continuously for more than 1 hour.

2.4.2 Draughtability of animals in rotary mode

Anonymous (1983a) reported that maximum power, which could be reached for a very short duration, might be ten times of the optimum power. Power, speed and daily working time influenced the tractive power identically and increase in one resulted decrease in other factors. Due to circular path losses would occur in the sweep power, which might account for 50 per cent of the output that could be reached with traction on a straight path. This resulted in slow speed of the animal and the loss of tractive power both. It was suggested to choose as large diameter of the track as possible to increase the output. This however increased the cost of structure and reduced the speed. The losses could further be minimized if, fore feet and hind feet of the animal move at the same speed i.e. on the same circular path and tractive force might be applied tangentially to the circular path.

Thakur *et al.* (1987) studied the physiological responses of he buffaloes exerting draught of 30 to 120 kgf in rotary mode of work at different levels of walking and resting periods. The heart rate, respiration rate and rectal temperature increased steadily about 1.5 to 2 h and steady state was reached. The minimum and maximum variation in heart rate and respiration rate was recorded approximately 25 to 84 and 100 to 570 per cent respectively. Respiration rate was reported to be most sensitive and quickest parameter to reach its normal value during rest pause.

Thakur *et al.* (1989) reported that the physiological responses increased with increase in draught. The draught varied from 60 to 200 kg in a rotary mode of work for a period of 1, 2 and 3 h continuously and subsequently given a rest up-to 2 h in a shade. All the physiological responses increased steadily up to a limit from its resting level with the increase in draught loads. The maximum variation of 250 to 657 per cent was recorded in respiration rate followed by the pulse rate and rectal temperature in the range of 61 to 91 and 4 to 9 per cent respectively from their resting level. The power output of animals remained constant at lower draught i.e. 10 per cent of body weight. The respiration rate was found most sensitive to increase during work and decreased to its normal resting level during recovery period. Hence respiration rate can be considered as a good measure of

physiological loads. The environmental conditions had more profound effect on physiological responses during work and rest than the magnitude of draught. The recovery was faster while working under cool environment during winter at air temperature ranging from 19–25°C, as compared to the higher temperature of 25–32°C during autumn season. The pulse rate reached a steady state early after about 1-1.5h of work followed by respiration rate, which reached the steady state only after two hours of work.

Anonymous (2000c) used Nagori bullocks weighing 610 and 560 kg in rotary mode of operation. The bullocks were required to develop draught load equivalent to 6 to 14 per cent of body weight. It was found that at draught level of 12 per cent of body weight bullocks worked safely for 4 hours. Optimum power output of bullocks was found to be 0.72 hp at hitch point at working speed of 1.73 km/h and 112 kgf draught, which worked out to be 9.6 per cent of their body weight. The mechanical efficiency of the gear system was 52.8 per cent.

Chakravati *et al.* (2004) evaluated draught performance and work efficiency of bull under hot and humid climate stress conditions with a draught force ranging from 21.0 to 32.9 kg over a continued time frame of work. At the end of work the percentage increase in respiration rate, pulse rate and rectal temperature varied from 95.13 to 12.31 and 0.57 to 201.79, 26.89 and 1.23 with an average of 134.41 ± 11.09, 17.84 ± 1.26 and 0.91 ± 0.06 respectively. The draught power generated by the bulls varied from 0.44 to 0.75 kW with an average of 0.60 ± 0.02 kW and speed ranged from 1.90 to 2.39 m/sec with an average of 2.20 ± 0.05 m/sec.

Din *et al.* (2004) studied scheduling of work rest cycle for Nagori and local breed of bullocks in rotary mode. They concluded that bullock could be used in rotary mode of operation for three hours continuously at draught levels of 8 to 10 per cent body weight safely. The power output remains nearly constant with the period of work for draught load lower than 10 per cent of body weight. The physiological parameters of outer bullock were substantially higher than inner bullock because of more travel of outer bullocks.

Tiwari *et al.* (2005) reported the tractive efforts of various draught animals in Indian conditions. They found that draught capacity of bullocks, male buffaloes, camels and donkeys was 14, 10, 18 and 24 per cent of their body weight respectively.

Studies showed that the power available from animals vary considerably. Though the animal is capable of supplying higher draught loads for short duration but draught load in the range of 8-16 percent of body weight can be applied safely for sustained working. The maximum traction power can be achieved very high but for a very short duration and sustained working under such high traction load is not advisable. The power available in rotary mode is considerably low as compared to linear mode of operation.

2.5 Work Rest Cycle

Considering the change in physiological reactions and physical symptoms for assessment of fatigue, it is essential to provide rest pauses to animals between prolonged hours of work and one or two days rest after several days of work. The number of rest pauses however depends upon the extent of use, type of work, environment and other factors.

Verma and Singh (1987) stated that donkey could work at draught up to 22.62 per cent of its body weight with work schedule of 3 hours work, 2 hours rest followed by 3 hours work. Donkey showed fatigue symptoms in the draught range of 25.33 to 31.33 per cent of body weight. In the above range of draught it could work for 6 hours in a day but required 1 hour rest after every 2 hours of work. The donkey could work only for 1 hour at draught of 34.66 per cent of body weight and required 1 hour rest after work. It could only be employed for 4 hours of work in a day giving 1 hour rest after each hour of work. At this draught, the donkey was in fatigue.

Anonymous (1993) conducted study to find out suitable work rest cycle to increase the efficiency and duration of work of Malvi and local breed of bullocks. Bullocks were used for 4 hours in forenoon and 3 hours in afternoon with 1 hour of rest. Summer trials were conducted during March –May when ambient temperature was 27 to 42^{0}C and humidity was 12 to 25 per cent. Winter trials were conducted during November to January when the ambient temperature and humidity were 13 to 28^{0}C and 25 to 55 per cent, respectively.

Anonymous (1995) collected information regarding prevailing schedule of work rest cycles and found that farmers did not follow any uniform work rest cycle. Further they reported that the work rest cycle varied according to region and season. Six different work rest cycles for winter and summer seasons were studied and the work rest cycle of 4 h (work) – 7 h (rest) - 4h (work) was found best amongst the cycles studied for winter and summer seasons for Murrah he buffalo.

Anonymous (2000c) conducted study to find out suitable work rest cycle to increase the efficiency and duration of work of Nagori and local breed of bullocks. Total eight-work rest cycles, four each for winter and summer seasons were studied for the purpose. Bullocks were used for 8 and 6 hours of effective work in winter and summer season respectively. A rest period of 30-40 min was suggested after every 2 hours of continuous work for proper utilization of bullock power.

Verma and Mathur (2002) studied different work rest cycles and reported that there is a general trend in rural areas to use the draught animals in the cooler period of the day for work, i.e. morning and or evening hours, which are more comfortable to the animals and the operator has long brake in the day to attend other works.

Din *et al.* (2004) assessed different work rest cycles for camel under sustained working. C.I.A.E loading car was used as a loading device. Various combinations of work rest cycles at six levels of draught (16, 18, 20, 22, 24 and 26 per cent of body weight) were assessed. Further, they suggested that the camels should be operated in two sessions, namely early in the morning and in the evening in summer session to avoid excessive thermal stress.

Sharma and Singh (2004) conducted studies on Murrah he-buffaloes using improved rotary apparatus. Buffaloes worked for 4 to 8 hours depending on work-rest cycle. Low fatigue score was observed in work-rest cycle of 4h (work) - 7h (rest) - 4h (work) as compared to the work rest cycle of 2h (work) - 1/2h (rest)- 2h (work) - 1/2(rest) - 2h(work) - 1/2h (rest) - 2h (work).

Tiwari *et al.* (2005) studied effect of three different work rest cycles on physiological behaviour of camels in field operations. They reported that the camels could be used for 8 hours in a day with work rest cycle of 2h work- 1h rest – 2h work – 4h rest – 2h work – 1h rest – 2h work without showing fatigue symptoms.

It was observed that the work rest scheduling is not uniformly followed. The work rest cycle depended on a number of factors such as species, breed, sex, size, body weight, nutrition and health and season. Most of the work rest cycles comprised of two sessions, one in the forenoon and other in the afternoon with a long duration rest in between them. Generally the same practice is also followed by the farmers.

2.6 Fatigue Assessment

Anonymous (1972) observed that fatigued animals were more susceptible to diseases due to loss of weight and weakness which might lead even to death from exhaustion. Fatigue was observed as a combined effect of draught, speed and duration of work, which leads to lowering of physical resistance. The climatic factors namely atmospheric temperature and relative humidity also influenced work capacity and fatigue of animals. A hot and humid climate was known to cause early fatigue followed by hot and cold climate.

Upadhyay *et al.* (1985) studied the effect of work on blood metabolic and physical reaction in Zebu and Zebu cross breed bullocks. On basis of subjective evaluation in terms of physiological responses recorded simultaneously with physical inability or limitation of work expressed through behavioural manifestation were given in a fatigue score card.

Bhatt *et al.* (2002) evaluated and suggested a fatigue score card for camels. The score card was based on total seven parameters on four point scale. The total fatigue score would be 28 from this score card. However, for deciding the fatigue score limit 14 point score had been considered as a safer limit for working of camels at different draught levels. Further this score card had been divided in

four zones i.e. less tired, tired, more tired and excessive tired with their respective fatigue score of 0-7, 7-14, 14-21 and 21-28.

Pradeep and Tiwari (2005) assessed fatigue of Bikaneri camels in field work at different work rest cycles using fatigue score card. Fatigue was assessed on the basis of physiological parameters and physical symptoms. They reported that camels exhibited less fatigue symptoms with work rest cycle of 2h work- 1h rest – 2h work – 4h rest – 2h work – 1h rest – 2h. The physiological parameters and physical symptoms influence the fatigue of the animals.

2.7 Traditional Rotary Mode Systems

For centuries animal power has been usefully employed to operate mills, which required slow speed but high torque. Such systems used available materials and local energy sources and can be made and maintained by local artisans. The animal powered water wheels, provided relatively continuous delivery of water and had been employed in North Africa and Asia like Persian wheel and Egyptian Sakia. The other users of animals were Srilankan mote, oilghanis and sugarcane Juice-expeller. At few places animals also operated horizontal flourmills.

2.7.1 Persian wheel

Michael and Khepar (1989) reported that Persian wheel consisted of an endless chain, buckets, MS spoked drum (sprocket), water trough, one set of peg tooth bevel gear and a wooden beam to hitch the animals. Animals hitched to a long horizontal wooden beam and allowed to walk on a circular track drove a set of a large horizontal gear (48 peg tooth) and vertical gear (32-peg tooth) installed at the centre. The vertical gear drove long MS shaft, laid under the track, extending to the central axis of a large open spoked MS wheel (drum) mounted with endless chain and series of buckets and the chain and buckets loop into water in the well. The traditionally used earthen pots and jute or coir roped endless-chain had been replaced by sheet metal buckets and MS bar chain respectively. A ratchet prevented backward turning of water filled buckets. The draught ranged between 25 to 45 kgf.

2.7.2 Egyptian sakia

Lowe (1983) reported that Egyptian Sakia was used to lift water from shallow depths. Water was scooped up in a series of spirals and discharged into irrigation ditch from the central hub of the wheel. The radius of the wheel limited the height by which water can be lifted, which was generally less than 2 meters. It was suitable only for areas close to river, lakes, irrigation channels or other area with relatively high water table. The output of such Sakias could be as high as 100 m^3 /hour with a 2.5 m lift. One Sakia could irrigate 6-10 hectares of crop.

2.7.3 Oil ghani

Anonymous (1983a) reported that oil was traditionally extracted by means of the 'Ghanis' a mortar-and–pestle–like equipment. A conical cavity is made in centre of the base unit in which pestle rotates in inclined position. The rotating pestle crushes seeds and squeezes out oil. Even today the oil 'Ghani' is widely used for oil extraction.

2.7.4 Srilankan mote

Anonymous (1983a) reported that animals walked in a circular path, and a beam attached to overhead ropes or wires act as a crank, converting the circular movement into the vertical lift and fall of two containers. Sahroes mote was developed from the same principal in Senegal. An animal, usually donkey, pulled a beam in a circular path causing an overhead, counterbalanced rope to operate a simple piston pump with extraction rate of 6 m^3 per hour at a lift of 6 m dropping to 1.8m^3/hour at 20m.

2.7.5 Sugar cane juice expeller

Anonymous (1983b) reported that milling of sugarcane consisted of three MS gear teeth rollers mounted vertically in a frame. The crusher is firmly fixed in the ground with the help of two wooden logs. The draught requirement of the crusher varies in the range of 65 to 75 kgf.

Animal power in rotary mode systems had been used at different places in the world. All systems required low speed and high torque available through the draught animals. With the invention of compact and very small IC engines which required maintenance and running cost only when they were used, made engines very popular replacing slow moving low capacity animal operated machines.

2.8 Modern Power Transmission Systems for Rotary Mode

The ever-rising cost of fossil fuels, fast depletion of known reserves of convention fuels and unfavourable economics of tractor for small and marginal farmers has been a point of concern. This necessitated the need to redefine the role of animal power in present day world by making them economically viable by finding new uses. Efforts were made by different workers to make better use of animals by developing suitable mechanism for using the animals to operate the present day stationery agro processing machines in order to enhance their annual utilization. A number of power transmission units have been developed in India and other parts of the world.

Anonymous (1972) reported that animal powered gears were used to lift water in remote parts of Africa. The power available from a single animal with the use of such gears was reported to be 0.16, 0.25, and 0.32 hp for donkey, light horse and light ox respectively.

Tiwari and Mishra (1984) developed an animal drawn drilling rig for shallow tube wells. The bullocks were allowed to move in a circular path of 2 m radius at the speed of 5 km/h such that it made about 7 revolutions per minute to provide 18 strokes per minute to the reciprocating mud pump used in drilling of shallow tube well. The power developed was 0.5 to 0.7 hp.

In India two heavy weight buffaloes were reported to be capable of pumping 20 cubic meters per hour through 8 meter lift using a Danish Bunger pump (Burton 1987). In case of overhead animal powered gears, an animal in large circle around the machine constantly pushed a horizontal pole or lever and it rotated a large horizontal gear/sprocket that drove a small vertical sprocket/gear at a designed speed ratio and at a normal speed. Animal power has also been used to drive commercially available pumps using multipurpose gears. Eight donkeys pumped, 5300 liter water per hour at a head of 38 meters (Meseng and Jacobi, 1985).

Anonymous (1988a) tested a commercially available bull gear at Central Institute of Agricultural Engineering, Bhopal. Bull gear was operated by a wooden beam (4.5 m). It had speed ratio of 1:28 and the overall power transmission efficiency of 37-50 per cent. Frequent wearing out of first stage bevel gear was reported. To overcome this problem a rotary gear system was developed, using bevel and spur gears with speed ratio of 1: 34.3. A shaft was used to transmit the power outside the animal track. Duplex water pump, flour grinder, and grain cleaner were operated.

Anonymous (1988b) developed a bullock powered bull gear with speed ratio of 1:33. It was used to operate hold on type paddy thresher at 260-430 rpm. The draught requirement to operate the thresher was well within the capacity of bullocks.

Anonymous (1988c) developed an animal powered gear system which consisted of a set of bevel and spur gear, shafts and sprocket. Ball bearings were provided for the four shafts. An oil bath was provided in the bottom of gearbox to reduce friction. Power from the gearbox was transmitted to the reciprocating pump and chaff cutter through pulleys and chain and sprocket. The output was low due to high losses in transmission system.

Starkey (1989) developed a multipurpose gear system for lifting water and grinding cereals. System consisted of a large wheel of 4 m diameter and three small wheels. Two of the small wheels supported the large wheel. When the large wheel rotated, its weight compelled third wheel to rotate which was connected to an output shaft through chain. The output shaft was situated below ground level so that the animals could walk easily in a circular path to drive the large wheel.

Roosenberg (1992) found that traditional European and American gear powers used large diameter pinion gears to make the first step up in speed. Other gear further increases the 2 rpm to 3 rpm of the animals by a factor of 30 or even 100. If that 60 rpm to 300 rpm was not sufficient, then a speed jack (an additional gear box) was placed in the line to increase the speed by an additional factor

of 3 to 10. This allowed them to drive machines at speeds of up to 1075 rpm. Unlike the GTZ model tested in the CAR, this gear power was separate from the machine being powered by operating a number of stationary machines with a drive shaft or belt.

Anonymous (1995) used a bull gear already available in market with speed ratio of 1:57.5. Frequent wearing of the bevel gears was observed and a gear system was developed. It consisted of two split flanged housing, vertical shaft with crown gear, horizontal shaft with spiral, pinion and spur gear. Two taper roller bearings, one near the top and other at the bottom end of the vertical shaft were provided to minimize the friction and side thrust. It had speed ratio of 1: 117.29 Power transmission unit was fixed to the concrete foundation by means of bolts and nuts. Wheat thresher and seed cleaner cum grader were operated as the matching machines for developed system.

Hallikery *et al.* (1995) developed a power conversion unit (PCU) that consisted of an old gearbox of Zetor tractor. A beam of 2.6 m length was used to hitch the bullocks to the PCU. A chain sprocket and belt pulley was used to obtain a desired speed ratio of 1:240. At a draught load of 70 kgf the power developed was 0.65 kW. The mechanical efficiency of the system was 78.28 per cent. A chaff cutter was operated by bullock power rotary complex and the draught required was well within the draught capacity of a pair of bullocks.

Anonymous (2000c) developed a power transmission system consisting of a bull gear and a belt pulley. A wooden beam of 4.5 m length was used to operate the bull gear. A draught of 70-85 kgf was exerted by a pair of bullocks to operate a chaff cutter.

Hallikery (2002) designed and developed a power transmission unit for operating chaff cutter, winnowing fan, castor decorticator and water pump. The power requirement of these machines was found to be 0.49 to 0.61 kW; 0.25 kW; 0.55 to 0.87 kW and 0.75 to 1.12 kW, respectively.

Anonymous (2003) developed a rotary gear unit , gear box of which consisted of spur gear made of heat treated alloy steel having module 4mm.the spur had 77 teeth. The speed ratio of 1:4.8 was obtained. A set of bevel gear with 6.5 mm module and 43 teeth with its pinion having 7 teeth was used with the speed ratio was 1:6. Combination of bevel and spur gear produced the speed ratio of 1:29.56. First shaft of bevel gear was vertical with 60 mm diameter and pinion shaft had 50 mm diameter pulley was used for stepping up the speed in ratio of 1:4.Ratchet assembly was used to prevent the back flow of power to the bullock.

Sharma and Singh (2004) designed and developed a rotary gear unit by using locally available gears. The overall efficiency of the system was found to be 84.10 per cent.

Anonymous (2004a) developed power transmission system and evaluated for its performance at various loads. During the test, bullocks/camel was hitched at a working radius of 3.5 m. the results

of feasibility trials showed that agro processing machines requiring less than 1hp could easily be operated by the power transmission unit. At a load more than 125kgf the camel/bullocks showed fatigue symptoms and were not able to work in sustained working conditions. Pairs of slotted channels were grouted parallel to the power output shaft. Other slotted channels were used to mount the desired agro processing machines and placed perpendicular to the power output shaft. Proper alignment and position of the machines were finalized by adjusting the channels in both the directions. Initially a rope was used to hitch the animals with the horizontal hitch beam. A single hollow rectangular section pull beam was used for hitching a pair of bullocks. This beam was attached with turntable through a pin joint for allowing movement in vertical plane while movement in horizontal plane was maintained by turntable as in case of camels.

Anonymous (2005) developed a rotary mode set up for electricity generation, the Bull gear used in this experiment was developed by BHU Banaras. In this unit a series of helical and herringbone gears and pinions were used to achieve a total speed step up of 1:310 at the output shaft. The gear box consists of a rectangular frame of the size of 1260 x 400 x 520 mm, and made of angle iron. One plate was provided at the top of 910 x 380 x 12 mm size to support the shafts and bearings. A plate was provided in middle of 760 x400 x 12 mm size to support gears. Five shafts comprising of one input shaft, three intermediate shafts and one output shaft were arranged in such a way that all shafts are vertical. One of the vertical shafts was used as input shaft, whereas the other vertical shaft was used as output shaft. Gears were provided to transmit power from input to output shaft.

Anonymous, (2007b) developed rotary gear box unit which consists of a rectangular box of size 970 mm x 560 mm x 510 mm made out of 10 mm thick M.S. plates. Four shafts comprising of one input, two intermediate and one output were arranged in such a way that three shafts were horizontal and one shaft was vertical. The vertical shaft was used as input whereas the horizontal shafts were used as output shaft. Bevel and spur gears were provided to transmit power from input shaft to output shaft. The intermediate shafts were used for increasing the speed up to the required limit. The top of the box can be removed to facilitate fitting of different components. The input shaft of the gear box was of 60 mm diameter and had a crown gear with 45 teeth. The crown gear drives a bevel pinion which had 7 teeth. The upper end of the input shaft had square cross section in order to fix the beam for hitching the animals. The first intermediate shaft having bevel pinion, had a spur gear on the other end with 51 numbers of teeth. This spur gear drives another gear having 13 numbers of teeth fitted on second intermediate shaft. Further on this shaft, another spur gear having 45 teeth was fitted. This gear drives spur gear having 13 numbers of teeth fitted on the output shaft. At the other end of this output shaft a v-groove pulley of 609.6 mm in (24”) diameter was provided to further step-up the speed. This pulley drives an alternator through a pulley of 63.5 mm (2.5”) diameter. The speed ratios available at different stages are as under (Table. 2.2):

Table. 2.2 Different speed ratio at different stage

1.	Stage I bevel gear	1 : 6.43
2.	Stage II spur gear	1 : 3.92
3.	Stage III spur gear	1 : 3.46

Anonymous (2008) in order to use draught animal power efficiently, conducted trials for feasibility study of rotary mode of operation. The gear unit installed earlier in these villages was overhauled and repaired as it was in use for long. The winnower available in the market was manually driven and no winnower was available in the market readily for adoption with rotary mode unit. Therefore, a winnower available in the market was procured and modified for adoption with rotary mode unit. The size of blades of winnower was increased from 540 mm to 820 mm. The modifications were also done in the winnower for transmission of power from rotary mode unit to winnower and a pulley of 150 mm size was mounted at the input shaft of winnower. The drive was given to the winnower with a flat belt. The overall speed ratio of 1:3.75 was obtained. The data were collected in respect of draught peripheral speed of bullocks and rotational speed of input shaft of the machines and input power was computed for these operations.

Doshi et al (2008) mentioned that animals are still used for water lifting in the Mewar region of Rajasthan. The Persian wheel and rope and bucket system are commonly used. For water lifting in Mewar region of Rajasthan, a pair of bullock is hitched to a long horizontal (wooden) beam and is allowed to walk on the circular track (radius about 3 m.). The centre of the track is 3.2- 3.5m away from the side of the well on which the MS spoked drum (sprocket) is mounted. The beam drives a large horizontal gear (about 1.1 m) installed at the centre of the track. This horizontal gear (48-peg tooth) drives a vertical gear (32-peg tooth). This set of gears changes the horizontal movement of the bullocks in a vertical plane. The vertical gear drives a long underground MS shaft (laid under the track) extending to the central axis of a large open spoked MS wheel (drum).

Anonymous (2009) CIAE Bhopal had developed the prototype of power transmission for the prime mover application for on farm operations. In this design spur and bevel gear pair were used. It gives 100-150 rpm from 2-3 rpm of animal movement in rotary mode, which is not high as this is primarily designed mechanical applications. The overall gear ratio of gear box is 1:33.78this prime mower is used for the application like chaff cutting, water lifting etc.

Devpura *et al* (2010) mentioned that the modified gear box for animal driven prime mower was installed at Abhyudaya Sansthan, Raipur for field testing. It was experimented with chaff cutter, rated with 300 rpm (which was achieved with help of belt and pulley) and capacity was about 1.5 hp. During the experiment some technical problems were encountered namely backward thrust at gear pairs, uncontrolled speed of bullock and excessive load on bullock. The problem of excessive load was solved by using improved yoke system and using clutch system at output shaft of the gear box eliminated the problem of backward thrust.

Thomas (2010) studied the animal power production and mechanisms for linking animals to machines, it was observed that in order to obtain 100 rpm from an animal walking at 0.6 m s^{-1} round a circle of 6 m diameter it required gearing up the speed by 52:1. Such high gearing requires several stages, the first of which must handle the high torque of one or two animals lurching at the end of a three meter bar. Animal gears of this type were manufactured until at least 1920 and have been intermittently researched since (including currently in Botswana and India). An animal gear should convert the animals' forward velocity (of say 0.6 m s^{-1}) into rotary motion at a small effective radius. In a rope engine, the animal pulls a rope round a pulley. To obtain 100 rpm the pulley diameter should be less than 12 cm. For a practical machine it is not acceptable for the animals to be repeatedly unhitched from the rope to allow it to be rewound. So the animals must walk in a circle and the rope must be an endless loop. This is actually very difficult to devise. One solution lies in inverting the problem so that instead of a moving rope driving a stationary pulley, the rope is fixed and the pulley moves past it. The pulley can be mounted on an arm that is hauled round by the animals.

2.9 Matching gadgets for rotary powered transmission system

Devendrakumar (1982) developed an epicyclical gear train to increase the speed of rotation of animals from 2.5 to 1440 RPM for operating a centrifugal pump. The unit was designed for discharge of 23400 letters per hour against a static head of 6 metres. Sukhavant Engg Co. Rampur of Uttar Pradesh developed a mechanical gear unit to obtain 900 to 1000 RPM at the output shaft to drive a bullock driven centrifugal pump. The test reported by G. B. Panth University of Agricultural and Technology, Pantnagar showed a maximum discharge of 21600 liters/hr. with overall efficiency of 34 per cent.

Meseng and Jacobi (1985) developed a British monopump which was driven by animal powered multipurpose gear. Two small oxen were capable of pumping 2m^3/ hr through head of 16 m.

Anonymous (1987) conducted studies on utilisation of animal power for operation of wheat thresher and seed cleaner cum grader. They concluded that wheat threshing was not economical with the help of wheat thresher operated by buffaloes in rotary mode of operation because of lower rpm

resulting into uneven breaking of grain and bhusa. The operation of seed cleaner cum grader with pigeon pea was feasible.

Anonymous (2004a) evaluated the performance of rotary mode set up for agro processing machineries. At a load more than 125kgf the camel/bullocks showed fatigue symptoms and were not able to work in sustained working conditions. The output of agro processing machines is work specific. It was observed that 525 kg of grain could be cleaned and graded in one hour. The output of flourmill and maize sheller was observed to be in the range of 8-10 and 120-130 kg respectively. An average person can shell out around 15-21 kg of grains manually which indicated about 625-850 percent increase in output with animal power operated maize sheller and same time it reduced the drudgery and labour cost. The shelling efficiency of the maize sheller was 93 percent. Chaff cutter operated by the animal powered gear gave about 3-4 times more output as compared to hand operated chaff cutter. Further, there is erratic supply of electrical power in rural areas, which supports the suitability of animal power based rotary mode complex.

Anonymous (2004b) evaluated the performance of rotary mode set up for chaff cutting and winnowing. For chaff cutting operation, the unit was being used for 8 hours to 16 hours per week at Balaji camp. For chaff cutting operation, the unit was being used for 17 hours per week. For winnowing operation, the winnower was being used for 16 hours per week to winnow 1130 kg/h of sunflower seeds. The chaff cutter used in the system has an output of 235-270 kg/h for chopping of green jowar fodder and 74-90 kg/h for chopping of dry jowar fodder. At Jakkaldinni village, the chaff cutter used in the rotary power unit has output of 228-265 kg/hr for chopping of greed jowar fodder and 78-94 kg/hr for chopping of dry jowar fodder. The power requirement varied from 0.46-0.60 kW for chaff cutting of hybrid jowar fodder and for winnowing operation, the power requirement varied from 0.42-0.45 kW for cleaning the hybrid jowar seeds. The farmers of Raichur region have shown good response in establishing the rotary power gear unit and preferred to use it for different operations.

Anonymous (2005) evaluated the performance of rotary mode set up for agro processing machineries. The study revealed that, average power requirement of chaff cutter operated with rotary mode unit was 0.425 kW for chaff cutting operation whereas, power requirement was 0.382 kW for paddy threshing operation and 0.422 kW for wheat threshing operation with chaff cutter. The power requirement for winnowing operation was 0.364kW. During the operation of these machines, it was observed that bullocks remained comfortable and with no signs of discomfort, which indicated that, draught exerted by these machines was well within draught ability range of the pair of bullocks. The peripheral speed of bullocks was also recorded for these operations. The rotational speed of chaff cutter was 135 RPM while, it was 276 RPM for winnowing fan. The output of chaff cutter driven with

rotary mode unit was found to be 314 kg per hour while, the output for paddy threshing operation with loop type paddy thresher driven with rotary mode unit was 135 kg per hour. The output with winnower for winnowing of Paddy crop was found to be 1059 kg per hour.

Anonymous (2007a) reported during electricity generation from rotary mode concluded that, It was feasible to store the electricity generated by animal power using a gear unit, alternator and battery. The electricity generated was stored in a 17 plate, 12 volt battery. This stored energy was utilized to operate appliances during idle period of buffaloes. The respiration rate ranged from 25 to 81 (Blows per minute).The pulse rate ranged between 44 to 77 (Beats per minute).The rectal temperature ranged between 37.2^0C to 39.7^0C.The charging time required was 7-8 hours at 1650 rpm of armature pulley. Efficiency of the system was found 18.56 per cent.

Practica foundation at Butajira tested animal driven deep well pump (Anonymous, 2007b). The pump had been designed to lift water from 17 m depth. The discharge at this depth was estimated to be 0.9 l/s using horse and pump stroke of 2 m. The pump was designed from 'minimum cost' perspective using material that were easily available from the market. The total cost of pump as installed in the vicinity of Butajira was 14 Birr including all material.

Anonymous (2009) mentioned that the "bullock powered energy machine" operates in the same way as the oil-presses of old (*Kolhu* in Hindi), this machine converts the 2 RPM input from a bullock into 1500 RPM output with the help of a simple gear box. The machine is stationery (no cart is involved), with a long lever like the lever of a *kolhu* (oil press). A bullock is tied to this lever, and the machines are operated by walking in circles around the machine, like a bull operating an oil press.

Doshi et al (2008) reported that the two most common water lifting devices are the Persian wheel (local name '*Rahant*') and the rope and bucket lift (local name '*Charas*') which are used in Mewar region of Rajasthan for water lifting. The Persian wheel is the most popular amongst the traditional water lifts. It consists of two major components one of which is mounted on the top of the water well, and the other is installed on a circular platform at certain distance from the well. These two components are connected through an underground mild-steel (MS) shaft. The Persian wheel consists of an endless chain, buckets; a MS spoked drum (sprocket), water trough, one set of peg-toothed bevel gear and a wooden beam to hitch the animals. The efficiency of these devices is low. It needs proper attention to improve the efficiency of these old tested systems powered by animals, which will increase the annual use of the animals at no extra cost and make them more viable economically.

Saha (2010) found that lot of work has been done on the technology of animal driven prime movers (ADPM) by different institutions and individuals. Some of them have been documented. IIT Delhi had done comparative study as well as technical analysis of the same a few years back. IIT

Kanpur had also been involved in similar study in collaboration with a manufacturer/fabricators of the pumps as well as the gear box used for the purpose.

Dippon (2010) developed animal-powered rice-huller. The rotary unit transforms the draught force of the animal into a rotary motion and increases the speed of rotation. To achieve the speed of rotations required for high hulling efficiency, a two stage gear box was mounted between the huller and the friction wheel. The gear box consists of two identical pairs of toothed wheels with a gear-ratio of 1: 31.2. To avoid damaging the bearings closed standard bearings were used. The power-transmission between the car wheel and the gear box was achieved by a small friction wheel (d = 12 cm) screwed on to the input shaft extension of the gear box and pressed to the surface of the car wheel tyre The gear-ratio of the friction wheel transmission is 1:5.