DEVELOPMENT AND TESTING OF PUMPING SYSTEMS POWERED BY KINETIC ENERGY OF WATER

M.Tech. (Agril. Engg.)

Thesis
by

Fanesh Kumar

DEPARTMENT OF SOIL AND WATER ENGINEERING
SV COLLEGE OF AGRICULTURAL ENGINEERING AND TECHNOLOGY & RESEARCH STATION,
FACULTY OF AGRICULTURAL ENGINEERING
INDIRA GANDHI KRISHI VISHWAVIDYALAYA
RAIPUR (C. G.)

2019

DEVELOPMENT AND TESTING OF PUMPING SYSTEMS POWERED BY KINETIC ENERGY OF WATER

Thesis

Submitted to the

Indira Gandhi Krishi Vishvavidyalaya, Raipur

by

Fanesh Kumar

IN PARTIAL FULFILMENT OF THE REQUIRMENTS FOR THE DEGREE OF

Master of Technology

In

Agricultural Engineering

(Soil and Water Engineering)

Roll No: 220117031 ID No: 20131418337

JULY, 2019

CERTIFICATE- I

This is to certify that the thesis entitled **"Development and testing of pumping systems powered by kinetic energy of water"** submitted in partial fulfillment of the requirement for the degree of **Master of Technology in Agricultural Engineering** of the Indira Gandhi Krishi Vishvavidyalaya, Raipur, is a recorded with the benefice research work carried out by **Fanesh Kumar** under my guidance and supervision. The subject of the thesis has been approved by the Student's Advisory committee and the Director of Instructions.

No part of the thesis has been submitted for any other degree or diploma or certificate course. All the assistance and help received during the course of the investigation have been duly acknowledged.

Chairman

Date: 22/07/19

THEIS APPROVED BY THE STUDENT'S ADVISORY COMMITTEE

Chairman	(Dr. Jitendra Sinha)	----------
Member	(Dr. M. P. Tripathi)	----------
Member	(Dr. V. M. Victor)	----------
Member	(Dr. Sweta Ramole)	----------
Member	(Dr. Prafull Katre)	----------

CERTIFICATE- II

This is to certify that the thesis entitled **"Development and testing of pumping systems powered by kinetic energy of water"** submitted by **Fanesh Kumar** to the Indira Gandhi Krishi Vishvavidyalaya, Raipur, in partial fulfillment of the requirement of degree of **Master of Technology in Agricultural Engineering** in the department of soil and water engineering has been approved by the external examiner and Student's Advisory committee after oral examination.

Date: 26.8.19

Signature External Examiner
(Name Dr B. Panigrahi **)**

Major Advisor _____

Head of the Department _____

Faculty Dean _____

Approved/Not Approved

Director of Instructions _____

Acknowledgements

The most beautiful thing in this world is to see your parents smiling, and knowing that you are the reason behind that smile. First of all, I would like to thanks my parents for their endless support.

I feel great pleasure in expressing my sincere and deep sense of gratitude to Dr. Jitendra Sinha, Major Advisor and Chairman of my advisory committee, Assosiate Professor, Department of Soil and Water Engineering, SVCAET&RS, Faculty of Agricultural Engineering, IGKV, Raipur, for his valuable guidance, constant inspirations and moral support throughout the research work.

I am very thankful to Dr. S. Patel, Dean of SV College of Agricultural Engineering and Technology & Research Station, FAE, IGKV, Raipur and Dr. M. P. Tripathi, Head of Department of Soil and Water Engineering, FAE, IGKV, Raipur, for his constant encouragement during project completion.

I like to express my gratitude to Dr. S. K. Patil, Hon'ble Vice Chancellor, Dr. M. P. Thakur, Director of Instructions and Dr. R.K. Bajpai, Director Research Services, IGKV, Raipur for their administrative and technical help which facilitated my research work.

I have a great pleasure in expressing my sincere thanks to my advisory committee members Dr. M.P. Tripathi (Member from department), Dr. V. M.Victor (Member from other department) and Dr. Sweta Ramole (Member from supporting department) and Dr. Prafull Katre (Additional Member) for their priceless guidance, worthy suggestions and constant encouragement throughout the project

I like to express my sincere thanks to Dr S. Patel, Head of Department of Agricultural Processing and Food Engineering and Dr. A. K. Dave, Head of Department of farm machinery and power Engineering for their kind support and help at various stages of the study.

I am very much grateful to Dr. V.K. Pandey, Dean of Agriculture Collage Kurud (Dhamtari), Dr. P. katre, Asst. Professor Faculty of Agricultural Engineering, Dr. Dhiraj Khalkho, Assosiate Professor Faculty of Agricultural Engineering, and Dr. N.K. Agrawal Asst. Professor Faculty of Agricultural Engineering IGKV, Raipur for their valuable suggestions, guidance and support.

I am extremely thankful to all faculty members, Dr. R. K. Sahu, Er. A.P. Mukherjee Dr. Ajay Verma, Dr. S.V. Jogdand, Dr. Rajesh Naik, Dr. M. Quasim, Er. N. K. Mishra, Er. P.S. Pisalkar and Dr. R. R. Saxena for their timely co-operation during the course of study.

I also wish to thank, the staff of fabrication workshop FMPE, FAE, IGKV, Raipur, and the entire technical and clerical staff member and other staff member SVCAET & RS, FAE, for their kind supported and help during entire study.

I am very thankful to Mr. Ramesh Dhruw, Mr. Shobha Dhruw, Mr. Ghanshyam Sahu, Mr. Satanand Jangde, Mr. Beerbal and staff of workshop Mr. Krishna, Mr. Komal Verma, Mr. Anand Masih and Raja, who helped me during the field experiment.

I avail this pleasant opportunity to express my sincere thanks to all of my seniors Er. Khomenra Sahu, Er. Bhupendra Dhankar, Er. Sameer Mandal Er. Jeetraj, Er. Shambhu Painkra, Er. Pushpraj Diwan, Er. Sourabh Das. And friends Er. Amrit Ekka, Er. Pankaj Sinha, Er. Vijay Sahu, Er. Jitendra Sahu, Er. Bhupendra Ghritalahre, Er. Amit Dahate,Er. Kishan Patel, Er. Sudhir Singh, Er.Yuvraj Singh, Er. Khyati Jain, Er. Preeti Ganjeer, Er. Jasmine Biswal. and all of my juniors Kamalkant Sahu, Homendra Sahu all of my other friends for their love, contribution and timely help during course of study. Also I express special thanks to all those who helped directly or indirectly during this study.

I have no words to express my heartfelt feelings to my beloved parent my father Mr. Pooran Lal, My mother late Mrs. Khorbaharin Bai, and my family member's brother Mr. A.R. Sahu, and sister Mrs. Bhuneshwari Sahu, whose filial affection, environment, love and blessings have been a beacon of light for the successful completion of this achievement.

I would like to convey my cordial thanks to all those who helped me directly or indirectly to fulfill my dream come true.

Place: IGKV, Raipur

Date: 22/07/2019

Fanesh

(Fanesh Kumar)

TABLE OF CONTENTS

Chapter	Title	Page
	ACKNOWLEDGEMENTS	i
	TABLE OF CONTENTS	iii
	LIST OF TABLES	vii
	LIST OF FIGURES	viii
	LIST OF PLATES	ix
	LIST OF NOTATIONS	X
	ABSTRACT	Xiii
I	**INTRODUCTION**	1-3
II	**REVIEW OF LITERATURE**	4-12
	2.1 Utilization of kinetic energy of water	4-6
	2.2 Water wheel pumping system	7-8
	2.3 Design consideration of pumping system	9-12
III	**MATERIALS AND METHODS**	13-37
	3.1 Details of study area	13
	3.1.1 Experimental site	13
	3.1.2 Geographical situation	13
	3.2 Development of pumping system powered by kinetic energy	13-26
	3.2.1 Cups type water wheel pumping system	13-20
	3.2.1.1 Constructional details CTWWPS	14
	3.3.1.2 Drawing	14
	3.2.1.3 Development and description of major components of CTWWPS	16
	3.2.1.3.1 Frame	16

Chapter	Title		Page

	3.2.1.3.2	Cart wheel	16
	3.2.1.3.3	Axel	17
	3.2.1.3.4	Cups	17
	3.2.1.3.5	Bearing	17
	3.2.1.3.6	Hub	17
	3.2.1.3.7	Shaft	18
	3.2.1.3.8	Pulley	18
	3.2.1.3.9	Belt	18
	3.2.1.3.10	Foot valve	18
3.2.1.4	Pump Selection		19
	3.2.1.4.1	Specification of selected centrifugal pump	20
	3.2.1.4.2	Working principle	20
3.2.2 Development of spiral tube water wheel pumping system			21-26
3.2.2.1	Constructional details of STWWPS		22
3.2.2.2	Drawing		22
3.2.2.3	Major components of spiral tube water wheel pumping system		23
	3.2.2.3.1	Frame	24
	3.2.2.3.2	Rim	25
	3.2.2.3.3	Flexible pipe	25
	3.2.2.3.4	Housing	25
	3.2.2.3.5	Hub	25
	3.2.2.3.6	Block Bearing	25
	3.2.2.3.7	T joint	26
	3.2.2.3.8	Union valve	26

Chapter	Title	Page
	3.2.2.4 Working of spiral tube water wheel pumping system	26
3.3	Discharge calculation of parshall flume	27
3.4	Fabrication work of water wheel operated pumping system	30
3.5	Test procedure of developed water wheel pumping system	31-32
	3.5.1 Measurement of suction head	31
	3.5.2 Measurement of delivery head	31
	3.5.3 Measurement of RPM	31
	3.5.4 Determination of pump speed	31
	3.5.5 Determination of pump discharge	31
3.6	Testing of water wheel operated pumping system	31
	3.6.1 General Operational Testing	31
	3.6.2 Performance testing	31-32
3.7	Setup of developed pumping system for operating CTWWPS and STWWPS	33
	3.7.1 Apparatus	33
	3.7.2 Procedure	33
3.8	Power requirement in pumping	34-35
	3.8.2 Kinetic Energy	34
	3.8.1 Friction loss	34
3.9.	Cost Analysis	36
	3.9.1 Fixed cost	36
	3.9.1.1 Depreciation Cost	36
	3.9.1.2 Interest	36
	3.9.1.3 Shelter and insurance cost	37
	3.10.2 Variable cost	37
	3.9.2.3 Repair and maintenance cost	

Chapter	Title	Page
IV	**RESULTS AND DISCUSSION**	38-54
	4.1 Development of pumping systems based on kinetic energy of water	38
	4.1.1 Development of water wheel pumping system	39
	4.1.2 Development of spiral tube pumping system	40
	4.2 Utilization of kinetic energy of water from parshall flume	40-43
	4.3 Testing and performance evolution of developed pumping systems for lifting and carrying water.	44-48
	4.4 Performance evaluation of developed small spiral tube pumping system for carrying water	49-52
	4.5 Economic evaluation	53-54
VI	**SUMMARY AND CONCLUSION**	55-57
	5.1 Summary	55
	5.2 Conclusions	56
	5.3 Suggestions for future work	57
	REFERENCE	58-61
	APPENDICES	
	Appendix A	62
	Appendix B	63-64
	Appendix C	65
	Appendix D	66
	Appendix E	67
	Appendix F	68-80
	RESUME	81

LIST OF TABLE

Table	Title	Page
3.1	Dimensions of Parshall flumes (Free- flow) of various sizes	28
4.1	RPM generated at the pump pulley by an average flow of water	39
4.2	Relation between discharge and lower depth of flow of parshall flume	41
4.3	Relation between discharge and medium depth of flow of parshall flume	41
4.4	Relation between discharge and higher depth of flow of parshall flume	42
4.5	Testing of pump discharge at constant suction head (0.56 m) and varying delivery head	44
4.6	Testing of pump discharge at varying suction and delivery head	45
4.7	Testing of pump discharge at varying suction head and constant delivery head (1m)	45
4.8	Testing of pump discharge at Constant suction head and Varying Distance travel of water	46
4.9	Testing of pump discharge at Varying suction head & Distance	46
4.10	Testing of pump discharge varying water velocity with 1 m distance of carrying water	50
4.11	Testing of pump discharge varying water velocity with 10 m distance of carrying water	50
4.12	Testing of pump discharge varying water velocity with 20 m distance of carrying water	51
4.13	Economic analysis of pumping systems	53

LIST OF FIGURES

Figure	Title	Page
3.1	3D view of cup type water wheel pumping system	14
3.2	Elevation of cup type water wheel pumping system	15
3.3	Plane of cup type water wheel pumping system	15
3.4	3D view of spiral tube water wheel pumping system	23
3.5	Elevation and front of spiral tube water wheel pumping system	23
3.6	Plane of spiral tube water wheel pumping system	24
3.7	Adjustable frame spiral tube water wheel pumping system	25
3.8	Discharge measurement of parshall flume	29
3.9	Plan and elevation of a parshall flume component parts	29
4.1	Cup's mounted water wheel pumping system	39
4.2	Spiral tube water wheel pumping system	40
4.3	Relationships between discharge and lower upstream depth	42
4.4	Relationships between discharge and medium upstream depth	43
4.5	Relationships between discharges and higher upstream depth	43
4.6	Discharge Vs head relationship at constant suction head and varying delivery head	47
4.7	Discharge Vs head relationship at varying suction and delivery head	47
4.8	Discharge Vs head relationship at Varying suction head and constant discharge head	48
4.9	Discharge Vs distance carrying of water relationship at Constant suction head	48
4.10	Discharge Vs Distance relationship at Varying suction head and Varying Distance carrying of water	49
4.11	Relationship between discharge Vs canal water velocity	51
4.12	Relationship between discharge Vs canal water velocity	52
4.13	Relationship between discharge Vs canal water velocity	52

LIST OF PLATES

Plates	Title	Page
3.1	Frame of cup type water wheel pumping system	16
3.2	Water wheel Cart Rim (66 cm)	17
3.3	Water wheel Cup (12.7 cm)	17
3.4	Bearing (1 cm inner diameter)	17
3.5	Water Wheel Axel , (50.8 cm)	17
3.6	Doctor Pump Shaft	19
3.7	Docter Pump Pulley	19
3.8	V – Belt (B Section)	19
3.9	Foot valve (∅ 2.5 cm)	19
3.10	Discharge Measurement of CTWWPS at fisheries dam	21
3.11	Flexible Spiral Pipe	26
3.12	Housing (GI Pipe)	26
3.13	Block Bearing (2.5 cm inner dia.)	26
3.14	Rim Hubs (∅ 2.5 cm)	26
3.15	Working of STWWPS at Mandher branch Village: Kendri	27
3.16	Assemble Component	30
3.17	Fabrication on Water Wheel	30
3.18	Welding Work on Spiral Tube	30
3.19	Fabrication on Housing	30
3.20	Testing of cup type water wheel pumping system at fisheries dam	32
3.21	Testing of spiral tube water wheel pumping system at village: kendri	32
3.22	Setup on Development of waterwheel Pumping System	35
3.23	Setup on Developed Spiral tube pumping System	35

LIST OF NOTATIONS / SYMBOLS

Symbol	Description
Argil.	Agricultural
Agric.	Agriculture
AMA	Agricultural Mechanization in Asia, Africa and Latin America
ANOVA	Analysis of variance
Anon	Anonymous
CCA	Canal Command Area
Engg.	Engineering
IGKV	Indira Gandhi Krishi Vishwavidyalaya
ICAR	Indian Council of Agriculture Research
IS	Indian Standard
Avg.	Average
cc	Cubic centimetre
cm	Centimetre
CTWWPS	cup type water wheel pumping system
et. al	and others
etc.	Etcetera
Fig	Figure
FC	Field Capacity
GI	Galvanised iron
H	Head
Hp	Horse power

ha	Hectare
Hr	Hour
i.e.	That is
I/P	Input
IHP	Input horse power
J	Joule
Kg	Kilogram
Kg ha^{-1}	kilogram per hectare
Kg cm^{-2}	kilogram per square centimetre
Km	Kilometre
Kw	Kilowatt
Km h^{-1}	kilometre per hour
m^3s^{-1}	Cubic meter per Second
l	Litre
lph	litre per hour
lps	litre per second
lpm	litre per minute
lpd	litre per day
m	Metre
M	Mass
Msl	Mean Sea Level
mm	millimetre
MS	Mild steel

m/s	meter per second
m^2	Square meter
m^3	Cubic meter
N	Newton
No.	Number
%	Percent
Ø	Diameter
+	Plus
-	Minus
×	Multiply
÷	Divide
O/P	Output
Q	Discharge
Rs	Rupees
₹	Rupees
S	Second
SS	Stainless Stile
STWWPS	spiral tube water wheel pumping system
t	Time
Viz	Namely
v	Velocity
V	Volt
WHP	Water horse power
W	Watt

THESIS ABSTRACT

Title of the thesis	: Development and Testing of Pumping Systems Powered by Kinetic Energy of Water
Full name of the student	: Fanesh Kumar
Major Subject	: Soil and Water Engineering
Name and Address of Major Advisor	: Dr. Jitendra Sinha (Associate Professor) Department of Soil and Water Engineering, SVCAET & RS, FAE, IGKV Raipur (C.G.)
Degree to be awarded	: M. Tech in Agricultural Engineering

Signature of Major Advisor

Signature of Student

Date: 22/07/19

Signature of Head of Department

ABSTRACT

An experiment was conducted on "Development and Testing of Pumping Systems Powered by Kinetic Energy of Water" at Department of Soil and Water Engineering, SVCAET & RS, Indira Gandhi Krishi Vishvavidyalaya, Raipur (C.G.). The study aims at development of pumping systems based on kinetic energy of water, performance evaluation of developed systems for lifting and carrying water and economical evaluation of developed pumping systems.

Kinetic energy of water powered pumping systems is a cheap, efficient and precise way of delivering water to farm pond/open well from nearby canal or nallah. The pumping system is simple to develop, install, operated and very much cater to the need of rural remote area. It may be suitable for un-electrified as well as unreliable electric supply area.

Two different types of pumping system viz. cup type water wheel pumping system (CTWWPS) and spiral tube water wheel pumping system (STWWPS) have

been developed. The major components of cup type water wheel pumping system include cart wheel, axel, cups, bearing, hub pulley and belt. The cups were mounted on the periphery of wheel and fixed over the frame. The power from the wheel is transferred to the pulley of pump. Flowing water pushes the cup, hence, the wheel is rotated and so the pulley of the pump. The speed up from wheel to pump pulley is 13 times. Hence, with 100 rpm of wheel the pump pulley will generate 1300 rpm. This creates vacuum and the centrifugal pump was operated.

Similarly, the major components of spiral tube water wheel pumping system includes rim, inlet valve, housing, flexible pipe, block bearing, tee joint, union and valve. Tube is fixed spirally in a wheel having rectangular plates in its periphery. The flowing water pushes the plates hence the wheel rotates. One end of tube is fixed with a large diameter inlet valve while the other end is attached in a housing at the centre of the pumping system. Water enters from the inlet side and because of rotation of wheel, the water moves spirally inside the tube. The water reaches the centre of housing while the succeeding water pushes the preceding to go ahead; this way the water comes out from the housing, which is delivered toward the outlet.

Measurement of flowing water in a canal/nallah was carried out using parshall flume. It is an accurate measurement of free flow of water and determines the discharge and velocity of water. The kinetic energy of water was used to operate the pumping system. The cup type water wheel pumping system was developed with a plate frame of 1.3 m to 0.84 m (length and height), water wheel 0.66 m diameter, axel 0.50 m and centrifugal pump of 1 hp. The spiral tube water wheel pumping system was developed with a frame 0.71 m, spiral water wheel 0.63 m diameter, housing pipe 0.74 m length, and overall height of pumping system is 0.98 m.

Testing and performance evaluation of pumping system was done at nallah of fisheries check dam at Krishi Vigyan Kendra, Raipur, I.G.K.V., Raipur (C.G.) and Mandher Branch Canal Tulasi (C.G.) and other suitable locations of nearby canal command area. Observation was taken on head (depth of water) in flowing water, flow rate and velocity of water, mass and kinetic energy, suction and delivery head, rpm of wheel, total head and distance carrying of water.

Testing of cup type water wheel pumping system was analysed for lifting and carrying water. The performance of cup type water wheel pumping system

(CTWWPS) was evaluated at different suction head and delivery head combination. The result shows that the pumping system is useful in lifting and carrying water with the power of flowing water. CTWWPS gave a discharge 0.178 to 0.378 lps at suction head of 0.56 m to 0.25 m and delivery head of 1.30 m to 0.70 m under 0.23 m to 0.59 m of head over the flume. While spiral tube gave a discharge of 0.05 to 0.193 lps at 0.30 to 0.46 m of water depth with flow velocity of 0.54 ms^{-1} to 0.41 ms^{-1} .

The developed system can be used to pump small portion of flowing water from canal/nallah to nearby pond/open well using kinetic energy of flowing water only, provided sufficient operating head and velocity is available at specific site.

शोध सारांश

शोध का शीर्षक	:	पानी की गतिज ऊर्जा द्वारा संचालित पंपिंग सिस्टम का विकास और परीक्षण
छात्र का पूरा नाम	:	फनेश कुमार
मुख्य विषय	:	मृदा और जल अभियांत्रिकी
मुख्य सलाहकार का नाम	:	डॉ जितेंद्र सिन्हा (सह – प्राध्यापक)
पूरा पता	:	मृदा और जल अभियांत्रिकी विभाग,स्व. वि. कृ. अ. पौ. म. एवं अ. कें, इं. गाँ. कृ. वि. रायपुर (छ. ग.)
उपाधि से सम्मानित किया जाना है	:	कृषि अभिययात्रिकी में एम टेक

मुख्य सलाहकार के हस्ताक्षर

Fanesh

छात्र के हस्ताक्षर

दिनांक : 22/07/19

विभागाध्यक्ष के हस्ताक्षर

सारांश

मृदा और जल अभियांत्रिकी विभाग, स्वामी विवेकानंद कृषि अभियांत्रिकी एवं प्रौद्योगिकी महाविद्यालय एवं अनुसंधान संकाय, इंदिरा गांधी कृषि विश्व विद्यालय, रायपुर (छ. ग.) में " पानी की गतिज ऊर्जा द्वारा संचालित पम्पिंग सिस्टम के विकास और परीक्षण " पर एक प्रयोग किया गया था। प्रयोग का उद्देश्य पानी की गतिज ऊर्जा के आधार पर पंपिंग सिस्टम का विकास, पानी उठाने और ले जाने के लिए विकसित प्रणालियों का प्रदर्शन मूल्यांकन, विकसित पंपिंग सिस्टम का अर्थशास्त्रीय मूल्यांकन।

पानी से चलने वाले पम्पिंग सिस्टम की गतिज ऊर्जा खेत तालाब / नहर या नाले से खुले कुएं तक पानी पहुंचाने का एक सस्ता, कुशल और सटीक तरीका है। पम्पिंग प्रणाली ग्रामीण सुदूर क्षेत्र की आवश्यकता को विकसित करने, स्थापित करने, संचालित करने और बहुत अधिक पूर्ति के लिए सरल है। यह गैर–विद्युतीकरण के साथ–साथ अविश्वसनीय विद्युत आपूर्ति क्षेत्र के लिए उपयुक्त हो सकता है।

पंपिंग सिस्टम के दो अलग–अलग प्रकार है कप टाइप वॉटर व्हील पंपिंग सिस्टम (CTWWPS) और स्पाइरल ट्यूब वॉटर व्हील पंपिंग सिस्टम (STWWPS) विकसित किए गए हैं। कप टाइप वॉटर व्हील पंपिंग सिस्टम के प्रमुख घटकों में कार्ट व्हील, एक्सल, कप, बेयरिंग, हब पुली और बेल्ट शामिल हैं। कप पहिया की परिधि पर लगाए गए थे और फ्रेम के ऊपर तय किए गए थे। पहिया से बिजली पंप के चरखी में स्थानांतरित की जाती है। बहता पानी कप को धकेलता है, इसलिए पहिया घूमता

है और इसलिए पहिये की गति पंप के चरखे की गति की 13 गुना थी। इसलिए 100 आर.पी.एम. व्हील के साथ पंप की चरखी 1300 आर.पी.एम. उत्पन्न करेगा। यह घटना वैक्यूम बनाता है और केंद्रप्रसारक पंप संचालित होता था।

इसी तरह सर्पिल ट्यूब वॉटर व्हील पंपिंग सिस्टम के प्रमुख घटकों में रिम, इनलेट वाल्व, खोखला धुरा, लचीला पाइप, ब्लॉक असर, टी जॉइंट, यूनियन और वाल्व शामिल हैं। ट्यूब अपने परिधि में आयताकार प्लेटों वाले पहिया में सर्पिल रूप से तय की जाती है। बहता पानी प्लेटों को धकेलता है इसलिए पहिया घूमता है। ट्यूब का एक छोर एक बड़े व्यास के इनलेट वाल्व के साथ तय किया जाता है, जबकि दूसरा छोर पंपिंग सिस्टम के केंद्र में एक खोखला धुरा में जुड़ा होता है। इनलेट की तरफ से पानी घुसता है और पहिए के घूमने के कारण पानी ट्यूब से अंदर की ओर बढ़ता है। पानी खोखला धुरा के केंद्र तक पहुंचता है जबकि सफल पानी पूर्ववर्ती को आगे बढ़ाने के लिए धक्का देता है इस तरह पानी आवास से बाहर निकलता है, जिसे आउटलेट की ओर पहुंचाया जाता है।

नहर / नाले में बहते पानी का मापन पार्शियल फ्लूम का उपयोग करके किया गया था। यह पानी के मुक्त प्रवाह का एक सटीक माप है और पानी के निर्वहन और वेग को निर्धारित करता है। पंपिंग सिस्टम को संचालित करने के लिए पानी की गतिज ऊर्जा का उपयोग किया जाता था। कप प्रकार के वाटर व्हील पंपिंग सिस्टम को 1.3 मीटर से 0.84 मीटर (लंबाई और ऊंचाई) के प्लेट फ्रेम, पानी के पहिया 0.66 मीटर व्यास, एक्सल 0.50 मीटर और 1 इंच के केंद्रप्रसारक पंप के साथ विकसित किया गया था। सर्पिल ट्यूब वॉटर व्हील पंपिंग सिस्टम को फ्रेम 0.71 मीटर, सर्पिल वॉटर व्हील 0.63 मीटर व्यास, हाउसिंग पाइप 0.74 मीटर लंबाई के साथ विकसित किया गया था और पंपिंग सिस्टम की कुल ऊंचाई 1.09 मीटर है।

पंपिंग सिस्टम का परीक्षण और प्रदर्शन मूल्यांकन कृषि विज्ञान केंद्र, रायपुर, इं. गाँ. कृ. वि. रायपुर (छ. ग.) और मांडर शाखा नहर तुलसी (छ. ग.) और पास के नहर कमांड क्षेत्र के अन्य उपयुक्त स्थानों पर मत्स्य जांच बांध के नाले में किया गया था। बहते हुए पानी, पानी की प्रवाह दर और वेग, द्रव्यमान और गतिज ऊर्जा, चूषण और वितरण सिर, पहिया का आर. पी. एम, कुल सिर और पानी की दूरी ले जाने में सिर (पानी की गहराई) पर अवलोकन किया गया था।

पानी उठाने और ले जाने के लिए कप प्रकार के वाटर व्हील पंपिंग सिस्टम के परीक्षण का विश्लेषण किया गया। विभिन्न प्रकार के सक्शन हेड और डिलीवरी हेड मेल में कप टाइप वॉटर व्हील पंपिंग सिस्टम (CTWWPS) के प्रदर्शन का मूल्यांकन किया गया। परिणाम से पता चलता है कि पंपिंग सिस्टम बहते पानी की शक्ति के साथ पानी उठाने और ले जाने में उपयोगी है। कप टाइप वॉटर व्हील पंपिंग सिस्टम ने 0.178 से 0.378 लीटर प्रति सेकंड में 0.56 मीटर से 0.25 मीटर के सक्शन हेड पर और 1.30 मीटर से 0.70 मीटर के डिलीवरी हेड को 0.23 मीटर से 0.59 मीटर के बीच वाले फ्लुम के सिर पर डिस्चार्ज दिया। जबकि सर्पिल ट्यूब ने 0.05 से 0.193 लीटर प्रति सेकंड का 0.30 से 0.46 मीटर पानी की गहराई 0.54 से 0.41 मीटर प्रति सेकंड के प्रवाह वेग के साथ दिया।

विकसित प्रणाली का उपयोग नहर / नाले से बहते पानी के छोटे हिस्से को पास के तालाब / खुले कुएँ में प्रवाहित करने के लिए किया जाता है, जो केवल बहते हुए पानी की गतिज ऊर्जा का उपयोग करते हैं, बशर्ते कि पर्याप्त ऑपरेटिंग हेड और वेग विशिष्ट स्थल पर उपलब्ध हो।

CHAPTER – I

INTRODUCTION

India is an agricultural country and there are many rivulets, stream, rivers and elevated canals. Under drop/fall condition the water flows with great velocity. The kinetic energy of flowing water can be utilized for some useful work like pumping. The energy of flowing water can be utilized for lifting and carrying water for irrigation purposes, filing the small ponds and also for other rural works in remote areas. Many farmers lift water from those streams to irrigate their crop by installing diesel pumps or electric pumps which require diesel or electricity. Growing cost of diesel and electricity demands a water wheel pumping system, which may work on mechanical energy. Kinetic energy powered pumping system can be used for irrigations or for delivering water in an environment friendly manner.

Water has different forms of energy such as kinetic energy and potential energy. Kinetic energy of flowing water caused from water moving from a higher head to lower head. Head-up of water level is also available in regulated canal and small check dam. It can also use elevated canal condition near the canal gate operated a pumping system. The small check dam is barrier which is constructed across stream and unregulated canals. The check dam is used to store the water in upstream side and deliver the water in downstream side. It is required to increase the water level up to 1 meter and it's achieved by using the stone gate. It can also increase the volume of water level in upstream side of check dam. The parshall flume is installed in gate of check dam which help the water to directly strike in pumping system.

The Parshall flume is an open channel type measuring device that operates with a small drop in head, adopting the venture principle. A parshall flume consist of three principle sections namely; (i) A converging section at its upstream end leading to, (ii) A constricted section or throat, and (iii) A diverging or expanding section downstream. The parshall flume of size 15 cm is used to intake more water and strike directly to pumping system with high velocity (Michel, 2009).

The low cost water wheel was made up by using locally available material. The machine was invented to overcome the problems of irrigation in higher elevation land nearby stream and check dam. The machine mainly consist turbine blade, rotating shaft, transmission mechanism, gear box and pumping system. The wheel is rotate with the help of water and Shaft was rigidly fixed with rotating wheel. To the shaft was coupled pumping system with suitable gear mechanism (Mangal Singh, 2008). Pumping system sucks the water from stream and delivers the water at a particular head. The water wheel pumping system can be operated by flowing water. Flowing water rotates the wheel and convert kinetic energy of water to mechanical energy. The power from the wheel is transferred to the pulley of pump. The water wheel operates the water pump. The system is totally eco-friendly. It is also use in elevated canals near the canal gate.

Now a days experiment is carried out by adopting the several methods for carrying water in small remote area. The spiral water wheel pump system could also be useful for carrying the water without disturbing the side bund of canal. The spiral tube pumping system, as per its name it includes water wheel and tubes. A wheel on which the spiral tube mounted and it rotate due to force of water flow which is act on the blade of wheel. Water enters from the inlet side and because of rotation of wheel, the water moves spirally inside the tube. The water passes in tube flowing towards the centre of wheel. The centre wheel consist a hollow axel which is work as a discharge outlet (Patel et al, 2017). The construction of a spiral tube water wheel system is very simple and it consist hollow axel supported by housing bearing which are mounted on stand.

The spiral tubes is fixed with wheel, when the water is flowing inside the tube wheel is rotated, and at the same time spiral tubes also rotated it-self. The water wheel revolves, when water passing around it. At every revolution water inlet dips into water and takes water into tube. Maximum water passes through the spiral tube followed by a core of air, when the wheel rotates. A new core of water is formed on every rotation and this phenomenon is happened continuously. A wheel has to be submerged 1/3 of its total diameter so it can take maximum possible amount of water (Mishra *et al*, 2016).

Spiral tube pumping system is eco-friendly water pump works on the principle of kinetic energy of water. Spiral water wheel pumping system is used to carry water in different places for multifarious rural work like storing of water in tank and farm pond and open well for the purpose of agricultural work.

Currently the focus of Chhattisgarh government is on 4 aspects, namely: Narwa (Water Resources Management), Garuva (Cattle Management), Ghurva (Composting Management) and Badi (Nutritional Management). This study entitled "Development and Testing of Pumping Systems Powered by Kinetic Energy of Water" might be of some use for the Narwa (Water Resources Management) programme which leads to Badi (Nutritional Management) programme in remote/un-electrified areas. Therefore, the study has been carried out with following specific objectives:

1. Development of pumping systems based on kinetic energy of water.
2. Performance evaluation of developed systems for lifting and carrying water.
3. Economical evaluation of developed pumping systems.

CHAPTER – II

REVIEV OF LITERATURE

This chapter include the work done by various researchers, academicians and innovators on the, development, utilization and evaluation of pumping system powered by kinetic energy of water. Review of literature has been categorized as follows.

1. Utilization of kinetic energy of water
2. Water wheel pumping system
3. Design consideration of pumping system

2.1 Utilization of Kinetic Energy of Water

Ahmad *et al.* (2016) stated that the mega projects like construction of power plants, nuclear reactors, and dams etc. while another method is to go for micro hydrokinetic projects, like installation of micro-hydro or micro turbines projects. This research paper presents a detailed report on using of convert nozzles for flowing of water from river turbines and also to devise a method for velocity reduction in open channels flow. Ghazi-Barotha open channel Canal has been used for the analysis based on its easily available data. The work has been done with the use of analytical and mathematical analysis. Hydro power is an alternative energy source, growing in demand particularly in rural and inaccessible areas. For Utilizing the flow of water and kinetic energy of water the converging nozzles is used to accelerate the flow to get more power and it is a fairly new concept. The concept is very popular and little work has been done in this field.

Araoz *et al.* (1962) reported that Water velocity is an important physical factor in the conditioning of streams and canals. Most of Ecologists of different areas have studied about resistance of these molluscs to the disturbing action of water flow. This study demonstrated the methodology used and the results obtained under the study which has been undertaken to elaborate the influence of water velocity by analysing the related variations of velocity of water in a given cross section of canal.

Chandler *et al.* (2014) emphasised the importance of study on flow of water through natural water courses. He explained the consequences of flooding because of frequent incidences of extreme rainfall events due to climate change. They elaborated and demands more consideration to the significance of vegetation in retardation of flood in rivers, rivulets and streams by reducing water conveyance. Therefore, University of Loughborough funded a project to investigate the role of vegetation upon flow of water by measuring flow velocity and 3-D water surface. The study has been presented in this research paper. Based on review work, close range digital photogrammetry has been used to capture surface velocity of water as well as 3D water surface.

Gabric and Hovany (2014) showed that a Parshall flume with b = 0.025 m wide having flow rate and water depth in the throat within the flow rate range of Q_{min}- Q_{max} discharge curve. Error values have been calculated by calibration of discharge curve through transposition of measuring point 1 to measuring point 2. These values are lower than the recommended standard values. Consequently, a new discharge curve was obtained at water temperature of 16 to 17℃ for flow rate below Q_{min} at measuring point 2.

Gharahjeh *et al.* (2012) studied about the discharge measuring commonly used as sharp-crested rectangular weirs were facilities in open channels and laboratories. In Weir plate the two dimension height and width were key elements in shaping the discharge-head relationship. The experiment demonstrated that for a certain range of discharge over the rectangular weir, height of the plate is no longer affecting the discharge. The Average velocity over the weir plotted against the head of weir has a unique behaviour. This behaviour can be used in such a way that can measure a weir velocity to estimate the discharge rather than using the discharge coefficient. Hence a more accurate outcome and a more short and compact form of expressions are expected to be obtained. The paper focused on the experimental investigation of various possible formulations of velocity of the rectangular weir for available weir heights and widths.

Hinkle (1989) explained the experimental procedure to measure, record and integrate over a time, the impulse applied to a surface from water drop impact. He

defined a dimensionless physically-based parameter “momentum number” as ratio of measured impulse to the drops momentum. The number can be used for modelling soil movement due to water drop impact. He further explained that there is no need of a sensor system for accurate impulse measurements and its calibration. However, to minimize signal amplification the resonant frequencies must be enough. He also identified the factors which needs to be considered while taking measurement on impulse.

Kim *et al.* (2010) emphasised on estimation of flow rate as per different season and studied proper execution for water resources development plan under low flow season. They reviewed the applicability of Parshall flume for measurements of flow rate. The formulae suggested by USBR and ISO, were found to be accurate when compared with the measurements taken from Parshall flume. Rate of flow was estimated by using the state-discharge rating curve equation and the results were compared with the flow rate by the Parshall flume. It revealed an error of approximately 14% when compared from the discharge rating curve equation.

Marten (2013) explained that the kinetic energy from tidal currents and other water courses can be a wide resource of non-conventional energy. The study provided vast information about the hydro-kinetic resource and mechanism for its conversion. He assessed the tidal energy resource in more than 100 sites with available data and found in the range of 17 TWh. He also analysed the distributions of velocity in unregulated rivers, regulated rivers, and tidal currents.

Nwajuaku and Okeke (2017) expressed the economical and flexible water measurement capabilities of Parshall flume for a wide range of open channel flow conditions. Other benefits include low construction cost, low head loss, adaptability to a wide range of channel types and features to measure broad ranges of flow. Discharge of the stream was measured with Parshall flume equation and it was found that the model has acceptable ability to calculate discharge through the constructed Parshall flume. Flow rates computed by the fabricated 0.1524 m Parshall flume have a slight difference of 0.00002 m^3/s – 0.00018 m^3/s, with that

of the flow rate calibration. The error in the estimation of flow rate between them was 0.0032 (0.32%) with a head loss of 0.0348 m.

Skogerboe *et al.* (1966) demonstrated that if value of water increases, then the measurement capability in irrigation system also increases. Improved discharge measurement results in improved water supply management. A channel has been developed, which includes current meters, orifice, weir, calibrated of gates and Parshall flume. They discussed the use of Parshall flumes for measurement of flowing water, including the utilization of a new approach for treating submerged flow that was developed at Utah State University.

Wright *et al.* (1991) studied about flow metering devices installed in sewage treatment plants constructed with excess capacity for future expansions, hence having conditions considerably below its maximum capacity in the early years of operation. Parshall flume being a versatile flow metering device in open channels, for flumes with UN-submerge throat sections. The discharge was determined from are a series of empirical equation that were developed by Parshall (1926) from calibration tests.

2.2 Water wheel pumping system

Anurag and Saini (2014) did study on small scale hydropower and expressed it as one of the wide potential form of non-conventional energy sources. Hydrokinetic turbines were more suitable to convert kinetic energy of water in the river, stream and marine current. This paper focuses on optimum parameters for different types of hydro kinetic turbines to develop the standard size hydro kinetic turbines for different sites.

Ibrahim *et al.* (2018) expressed that due to the debates on renewable energy resource, sustainable energy and renewable energy is increasing gaining interest in current research circles. This paper deals with solution in renewable energy resources, with effective technologies, and low cost in operation and maintenance. They emphasised that hydrokinetic resources can be considered a potential renewable energy resource. The water wheel with simple construction coupled with a basic concept of technology can be utilised as a sustainable and renewable rural energy system. The main benefits of this water wheel type are to an

agricultural use and water wheel operated water pump we can save energy no pollution. The people of Padang live in a water landscape encompassing the water wheel as an part of their lives, hence they relate to this technology of well as the utilisation and fabrication, making it an effective technology, finding relevance in the modern world.

Lewis *et al.* (2014) conducted a review study about the history of water wheels date back to ancient Greece. This technology of arriving at the development of the modern Francis runner lasted from 1848 to approximately 1920. The original turbines designed by James B. Francis in 1848, it became known as the Francis turbine around 1920, Though the modern Francis runner has little resemblance to his many contributions to hydraulic engineering analysis and design. The modern Francis turbine is the most widely used turbine design today, particularly for medium head and large low rate situations, and can achieve over 95% efficiency.

Mangal Singh (2008) stated that Bundelkhand is endowed with nature's bounties in terms of large number of rivulets, streams, perennial Nallahas etc. Farmers generally lift water from these water sources for irrigation by installing diesel/electrical pumps at the site itself. Obviously, this system requires commercial energy and expertise for its maintenance. Mangal Singh is a farmer of village Bhailoni lodh (distt. Lalitpur) realised the problems associated with these irrigation systems and thought of a situation where pump can be operated using the energy of flowing water itself.

Muller (2012) expressed that Water wheels have been known since antiquity. With the advancement in material science and industrial revolution the agricultural, hydro sciences were also developed. Water wheels did not disappear with the advent of steam for Contrary to common perception. Water turbines and engine evolved further but that even beginning of the 20th at the Century tens of thousands of water wheels was in operation .mainly in Central Europe. The main purpose of this study was to avail literature covering the design of engineering water wheels.

Patil *et al.* (2017) studied that in rural area the farmers are facing problem of power cut and finding difficulty in running a pump as it requires continuous

supply of electricity. They found that the spiral tube water wheel pump is an effective and environment friendly device or equipment to pump the water which runs on flow of water. This equipment can pump required discharge of water at desired head. The discharge of water is totally depending on the size of model of pump.

Vinay (2017) reported that water wheel turbine technology could be versatile in emerging modern technology after agricultural revolution. Results were analysed and final performance is to be done on the basis of hydro kinetic formula for calculating the power generated by the water wheel. The Focus was given to the low cost water wheel where efficiency is to be improved under the project of "Gharat" and lifetime will be increased due to the change in advance and efficient materials of the waterwheel. He reported design with two different types and with the different volume of water. Economics benefits with the Hydro powers used in the rural remote locations are also useful and efficient.

2.3 Design consideration of pumping system

Kyaw *et al.* (2004) aimed at designing the undershot waterwheel for water pumping system and to analyse stress on the shaft. It was employed in Mone-Taing canal at Meikhtila Township, Myanmar. In this design, load driving or flow torque, power and efficiency, shaft and bearing design are briefly considered. The analysis of shaft strength was discussed while the design discharge from the measurement was 1.274 m^3/s.

Mishra *et al.* (2016) reported that due to escalating prices of electricity and fuels, it is becoming more difficult to pump water by piston and reciprocating pump. This study was taken to simplify the problem and pump water at small scale with the easiest of economical and green technique. The setup required is cheap and low cost. Pumping water by using water wheel being run from the power of flowing water, by wrapped a tube around the plane of wheel to form a coil shape. The inlet of tube is 1/3 submerged in water, when the water flow is strike on flowing water of wheel then wheel in rotate water goes down on the tube with air which compressed in spiral tube. the water contained in the spiral compresses air between them as they travel around the tube and both air and water are expelled under pressure into the hollow axel of the wheel.

Naegel *et al.* (1991) searched for cost-effective pumps as a top research priority worldwide. They studied to develop models which can be powered by renewable energy sources, which can pump water to a higher head than the pump structure itself, and which can be built out of available materials by local craftsmen have produced two types of stream-driven pumps: the coil and the spiral pump.

Patel *et al.* (2017) focused on pump for agriculture purpose as rural areas farmers are facing problem of cut-off electricity. The pump also required fuels hence it is necessary to have some modification. During study they found that the spiral tube water pump is an effective method for pumping water or similar liquid without use of electric and fuel supply.

Sahu (2018) reported that an experiment was conducted on "Development and Testing of a Pedal Operated Rotary type Pumping System for Operating a Gravity Drip Irrigation." The aim of experiment was development of pedal operated pumping system, development of gravity drip system of irrigation for kitchen garden. Testing of developed pedal operated rotary type pumping system for operating gravity drip system of irrigation for kitchen garden. The performance of a developed pedal operated rotary type pumping system was analysed. This is very useful to exercising with pedal and lifting harvested water and also for lifting water to same height for any useful work. The performance of this pumping system is evaluated at different suction head and at different delivery head. The result shows that variation is discharge which suction head is not much prominent as compare to delivery head. So from this view it has been seen that the pumping system is useful in water supply for a very small area without electricity and with optimum human effort. It give a discharge of 0.65 lps (36 lpm) at 3085 m of suction head and 0.65 m of delivery head which is enough to irrigated small area of 100- 200 m efficiently. Gravity drip system of irrigation is a cheap, efficient and precise way of providing irrigation water for the kitchen garden.

Sule *et al.* (2014) emphasised on use of renewable energy, such as water energy, wind energy, solar energy, and geothermal. They have two different kinds of water wheel, with water velocity and the head energy as the experimental activity.

Torino *et al.* (2015) identified three main kinds of water wheels: undershot breasts hot and overshot water wheels. In undershot water wheels, the stream (flow) impacts the blades at the bottom of the water wheel; they are suitable in sites with high flow rates and small heads. In the early undershot water wheels the most of the stream (flow of water) kinetic energy was lost in the impact against the flat blades, making the efficiency quite low (30%). Then, at the beginning of the 19th Century experiment is carried out to increasing the efficiency up to 70% . Overshot water wheels are suitable in sites with high heads and small flow rates. Their efficiency is the highest among water wheels (constant efficiency up to 90% for a vast range of flow rates). Breasts hot wheels are used for sites with abundant flow rates and medium heads (i.e. along irrigation and mills canals); since the water enters at about the potential energy (water weight) of the stream are exploited and the same height of the rotation axle.

Wolter and Muller (2004) reported widespread use of breast shot water wheel in England and Germany during the nineteenth and early twentieth century. Although this type of water wheel even today has the potential for the economical and eco-friendly acceptance with small hydrokinetic with minimum heads from 1.5 meter to 2.5 meter, little is known about its performance characteristics. For assessment of breast shot waterwheel for hydropower generation, a study was undertaken at Queen's University Belfast for design methods and construction. Sample calculations for a 40 cm diameter wheel are given to explain the design principles. Based on these measurements and observations, improved geometries for in- and outflow were developed, finally resulting in maximum efficiencies of 87″3%.

Waghmare *et al*. (2015) stressed that at present world's most prime need is to save conventional sources of energy. The concern of concentration is the degradation of fuel and electricity sources, the diesel and gasoline oils. The pump also requires fuel and electricity for its operation. Hence it is necessary to study the design and construction and working of pump for its further modification. During this study it is found that the 'spiral tube water wheel pump' is an effective method for pumping water or similar liquid without use of fuel or electric supply. Also it is totally environmentally method. The designed pumping system is successfully

giving the positive results. It is pumping water system to give desired discharge and for various heads. So it can be used at different locations having rural and geographical diversity.

Yelgutwar *et al.* (2014) expressed Hydropower as the cheapest means to generate electricity in comparison to other commercial and non-commercial and non-renewable source. In the developing countries like India, with the increase in population and rise in the usage of fuel and electricity is increasing at an alarming rate. The following research paper gives an idea about efficient use of water wheels power generation in an open channel flow which gives low scale cheap, power generation solution for simple electrification and irrigation purpose. This is achieved by a horizontal axis water wheel attached to generating mechanism, converts mechanical energy into electrical energy, with the help of a pulley and belt arrangement. The following research paper explains the working principle, challenges, design with calculations, and applications along with future scope of the horizontal axis type waterwheel pumping system.

Zaman and Khan (2012) studied and worked on research work for analysis, evaluation and designing of a water wheel for the system techniques of a minimum head micro hydropower system using a water source. This is a support system to the irrigation of farm and is designed to provide electricity to destination. Water is pumped up to the reservoir when needed water is released from the upper reservoir through the water wheel to generate electricity. They chose a water wheel as a water turbine for the system and did research to design a waterwheel suitable for the hydropower site. Theoretical output power of energy has been calculated for arrange of water flow and a graph has been plotted using the relevant values.

CHAPTER – III

MATERIALS AND MATHODS

This chapter deals with materials used and the methodology followed for carrying out the research work. It includes study of existing development and testing of pumping systems powered by kinetic energy of water.

3.1 Details of Study Area

3.1.1 Experimental Site

Experiment was carried out during the year 2018-19. The present research work has been carried out in the field of Krishi Vigyan Kendra, Raipur, I.G.K.V., Raipur (C.G.) and Mandher Branch Canal Tulasi (C.G.) and other suitable locations of canal command area in Chhattisgarh state.

3.1.2 Geographical situation

The field of Krishi Vigyan Kendra, Raipur, I.G.K.V., Raipur, is situated in the central part of Chhattisgarh at latitude $21^0$23’32” N and longitude $81^0$71’35” E and at an altitude of 292 m above the mean sea level.

3.2 Development of pumping system powered by kinetic energy

When the head up water in canal/nallah falls downstream, it bears kinetic energy. The kinetic energy can be utilised for several works including pumping. In this study two different types of pumping system have been attempted.

3.2.1 Cups type water wheel pumping system

Cups type water wheel pumping system (CTWWPS) is a rotary machine that converts kinetic energy and potential energy of water into mechanical work. Flowing water is directed to fall on to the cups, creating a force on the cups. Since the wheel is spinning, the force acts through a distance. The power from the rotating wheel is transferred to the pulley of a centrifugal pump. It can be easily constructed by urban or village artesian. To make it portable and ease in transportation, the bottom of the frame is equipped with four wheels.

The material selection and the method of fabrication was made that overall cost of the water wheel operated pump is minimized so that it comes into the affordable range.

3.2.1.1 Constructional details of CTWWPS

A water wheel operated pumping system was developed in the form of carrying water while utilizing kinetic energy of water. A drawing of CTWWPS was done with the help of 3D design and Auto-CAD software. The overall dimension of CTWWPS is 83.8 cm in height, 102.8 cm in length and width is 44.4 cm. is depicted in Fig. 3.1.

3.2.1.2 Drawings

Engineering drawings of CTWWPS was created from the CAD models. The CAD model of the CTWWPS is shown in Fig.3.1. It helps visualize the design, both as individual parts and to show the interaction between the assembled components. The elevation and plan of CTWWPS with dimension in cm, is depicted in Fig. 3.2 and Fig. 3.3 respectively.

Fig. 3.1: 3D view of cup type water wheel pumping system

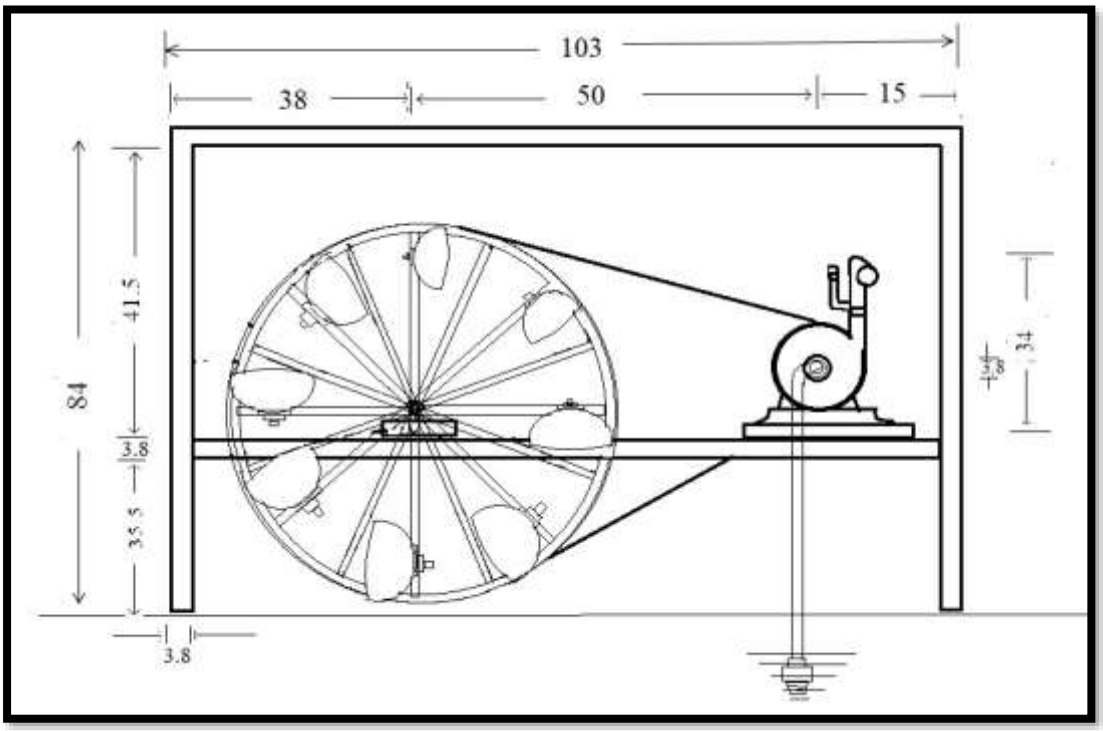

Fig. 3.2: Elevation of cup type water wheel pumping system

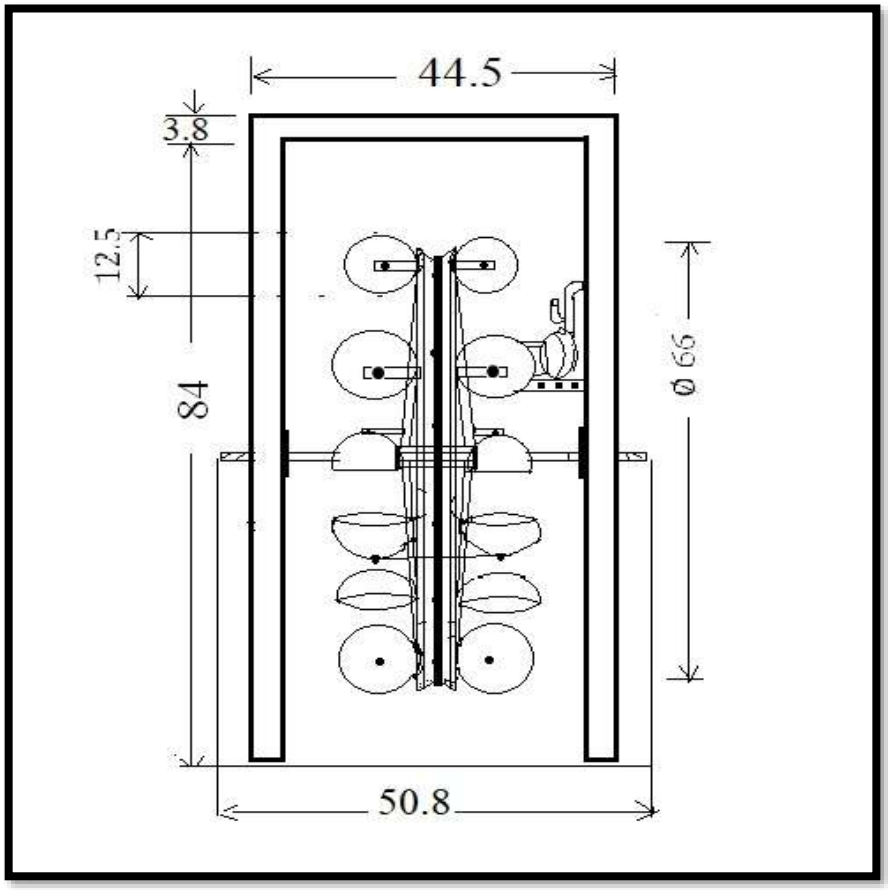

Fig. 3.3 Plan of cup type water wheel pumping system

3.2.1.3 Development and description of major components of CTWWPS

3.2.1.3.1 Frame

The frame forms the main body of the CTWWPS on which various components are assembled and it gives stability to the unit during the pumping operation. The frame provides points of attachment for the main components that make up the machine. The term is variously constructed, always including the bottom bracket, or to base frame. The rim, wheel and pump are attached to the frame. The isometric view is shown in Fig. 3.1 while elevation and plan drawing with dimensions are shown in Fig. 3.2 and Fig 3.3 respectively. It consists a rectangular frame mounted on four legs all made of steel angle iron of size 3.81 cm x 3.81 cm. The frame consists of the front portion on which the wheel is mounted at the centre. The overall dimension of the frame is 103 cm X 84 cm X 44.5 cm. The below Plate 3.1 shows the frame structure with major dimensions.

Plate 3.1: Frame of cup type water wheel pumping system

3.2.1.3.2 Cart wheel: A 66 cm diameter wheel (without tyre) of a Common Thela/Goods carrier has been used as drive wheel. It is made for mild iron and strong in nature. The cart wheel is shown in Plate 3.2.

3.2.1.3.3 Axel: A rod that serves to attach a cart wheel and provide support for bearings on which the wheel rotates. The dimension of axel is 1 cm diameter and length is 50.8 cm. The axel is shown in Plate 3.5.

3.2.1.3.4 Cups: Cups are fixed on both outer side of the cart wheel with suitable fasteners. The dimension of cups is 12.58 cm diameter. The cup is shown in Plate 3.3.

3.2.1.3.5 Bearing: Simple rotary bearings hold rotating components such as shafts or axles. It is transfer axial and radial loads from the source of the load to the structure supporting it. The dimension of bearing is 1 cm inner diameter and outer diameter 2.5 cm. The bearing is shown in Plate 3.4.

3.2.1.3.6 Hub: The centre of a wheel contains bearings and in a traditional wheel has drilled flanges for attachment of spokes. The dimension of hub is 2.5 cm diameter ad length is 10 cm.

Plate 3.2: Water wheel cart rim (66 cm)

Plate 3.3 Cup (12.7 cm)

Plate 3.4: Bearing (1 cm inner dia.)

Plate 3.5: Water wheel axel (50.8 cm)

3.2.1.3.7 Shaft

A shaft is a rotating machine element and it is fitted on pump and assembled the impeller, usually circular in cross section, which is used to transmit shaft power from impeller (pulley is assembled with shaft) with the help of belt, or from a wheel which produces rotating power to a pump which absorbs power. An impeller is assembled one side of shaft and other side pulley, the shaft with pulley assembled and to rotate with the help of belt. The shaft is shown in Plate 3.6

3.2.1.3.8 Pulley

A pulley is a wheel on a pump shaft that is designed to support revolving movement and change of direction of a belt, supporting shell is referred to as a pump block. Pulleys are also assembled as part of belt and chain drives in order to transmit power from one rotating shaft to another and also the impeller rotating and to lift the water. The drive element of a pulley system can be a belt, cable, rope or chain that runs over the pulley inside the groove or grooves. The dimension of hub is 2.5 inner diameters. The pulley is shown in Plate 3.7.

3.2.1.3.9 Belt

The water wheel operated pumping system used belt drive to transmit the power. This type of drive is used when the power is to be transmitted from wheel to pulley which is at a distance. Pulleys are mounted on the pump shafts and an endless belt is fitted tightly over these pulleys. The frictional resistance between these pulleys and belt is the reason for the power transmission, which depends on the velocity of belt, tension of the belt and arc of contact of the belt in the smaller pulley. This type of belt use to B section and diameter is 243 cm. This belt is shown in Plate 3.8

3.2.1.3.10 Foot Valve

A foot valve is a type of check valve that is typically installed at the bottom of a pipe line. A foot valve is found at the end of a suction pipe line. They application of a check valve, but they also have a strainer affixed to their open end. It is similarity work to non-return valve in which preventing the backward flow of water through the pipe when the water pump is stopped. Thus, in this process column of water in the pipe is maintained, and all the related issues are resolved. A foot valve is known as a check valve. The check valve is spring assisted. When the

pump turn on, the pressure inside the pump column change and the valve respond by open.

Plate 3.6: Doctor pump shaft

Plate 3.7 : Pulley (5 cm inner diameter)

Plate 3.8: V – Belt (B Section)

Plate 3.9: Foot valve (Ø 2.5 cm)

3.2.1.4 Pump Selection

From the measurement of discharge and flow velocity has been calculated the kinetic energy of flowing water. Therefore, the pump trial was based on power availability. In this project trial on selection of pump was based on the RPM being generated. Water submersible pump 18 W centrifugal pump (Electrical pump) was tried but it is not suitable because the pump was not equipped with pulley for

power transmission. Rotation was based on magnetic field. Self-priming mono-block 0.5 hp pump (Electrical pump) was also tested but not performed in below specified rpm. Unable to develop specified RPM through water wheel and not performing in RPM less than the Specified RPM.

The most suitable type of pump for this project work was found to be a centrifugal pump. Its compact size, simplicity of design, relatively low cost, light weight and widespread availability of pumps and spare parts make it ideal for use in this project. The mechanism was capable of developing maximum 1400 RPM. This pump was capable of lifting water at below 1400 RPM also. Centrifugal pumps are a well-established technology and consequently their performance is well understood. The performance of a centrifugal pump is governed by the impeller diameter, rotational speed, input power and the output piping system. The pump affinity laws give the relationship between head, flow rate, input power, rotational speed and impeller diameter for centrifugal pumps.

3.2.1.4.1 Specification of selected centrifugal pump

1. Horse power – 0.5 & 0.8/1.02
2. RPM - 2900
3. Total head - 10 m
4. Discharge - 2.1 lps
5. Pump efficiency - 49 %
6. Impeller Diameter - 99 mm
7. Pipe size - 25 X 25 mm

3.2.1.4.2 Working principle

In waterwheel operated water pumping system when wheel is operated by kinetic energy of water then kinetic energy is transferred into mechanical energy and this energy is transfer to belt drive, from kinetic energy is transfer to wheel, from Wheel it is transfer to Pulley, from pulley energy is transmitted to pump by shaft. So water is sucked from sump and lifted up to 1 m. Water Pump is a mechanical device which converted to mechanical energy into hydraulic energy. A centrifugal pump is of a simple design. The two main parts of the pump are the

diffuser and impeller. Impeller, which is the one only moving part, is attached to a shaft and driven by a motor and other power. The diffuser (also called as volute) houses the captures and impeller and directs the water of the impeller. Water enters the eye of the impeller and exits the impeller with the help of force of centrifugal. As water leaves the impeller eye a low-pressure area is created, causing more water to flow into the eye of impeller. The main working to atmospheric pressure and centrifugal force cause this to happen. Velocity is developed as the water flows through the spinning at high speed. The pressure (head) that a pump will develop is in direct relationship to the impeller diameter, the number of impellers, the size of impeller eye, and shaft speed. The capacity and head are the main factors, which affect the horsepower size of the motor to be used. The quantity of water is more to be pumped; the more energy is required. The plate 3.10 shows discharge measurement.

Plate 3.10: Discharge measurement of CTWWPS at fisheries dam

3.2.2 Development of Spiral Tube Water Wheel Pumping System

A spiral tube water wheel pumping system (STWWPS) is very simple consist of the hollow axel, supported by hosing bearing which are mounted on stand. The wheel fixed with spiral tubes in its periphery. When the water wheel is rotated, spiral tubes also rotated it-self. The waterwheel revolves, when water passing around it. Thus, once per revolution each water collector or tube dips into water. Maximum of water passes through the spiral followed by a core of air, when the

wheel rotates. A new core of water is formed on every rotation and this phenomenon is happened continuously. The inlet container takes in maximum possible amount of water. Angle iron, were used for the construction of the frame body.

The governing factor in development of pumping systems is availability of kinetic energy, which in turn depends on mass and velocity. The pumping system was made simple by using components, which are readily available in the local market. The operations and adjustments were kept simple and easy so fabricated light angle iron for frame.

3.2.2.1 Constructional details of STWWPS

A STWWPS was developed in the form of carrying water while utilizing kinetic energy of water. A drawing of STWWPS was done with the help of 3D design and Auto-CAD software. The overall dimension of Spiral tube operated pump is 105.75 cm in total height, 67 cm in length and Width is 62 cm.

3.2.2.2 Drawing

Engineering drawings of was created from the CAD models. The CAD model of the CTWWPS is shown in Fig. 3.4. It helps visualize the design, both as individual parts and to show the interaction between the assembled components. The elevation and plan of CTWWPS with dimension in cm, is depicted in Fig. 3.5 and Fig. 3.6 respectively.

Fig. 3.4: 3D view of spiral tube water wheel pumping system

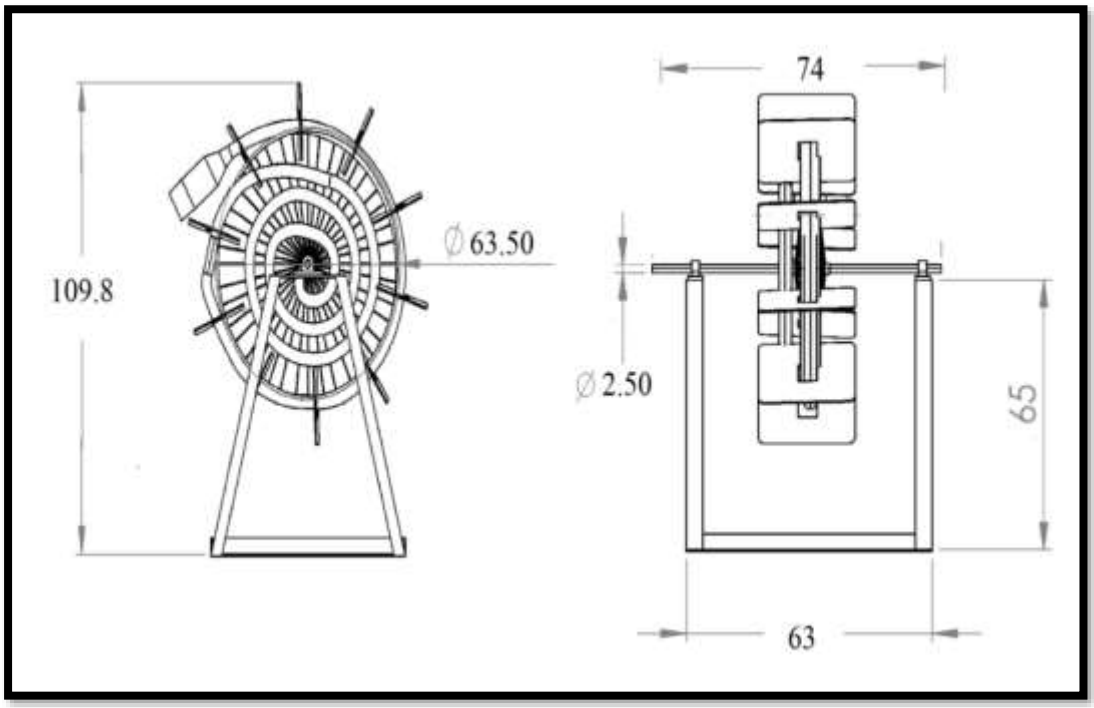

Fig. 3.5: Elevation and front view spiral tube water wheel pumping system

All Dimensions is Centimetre

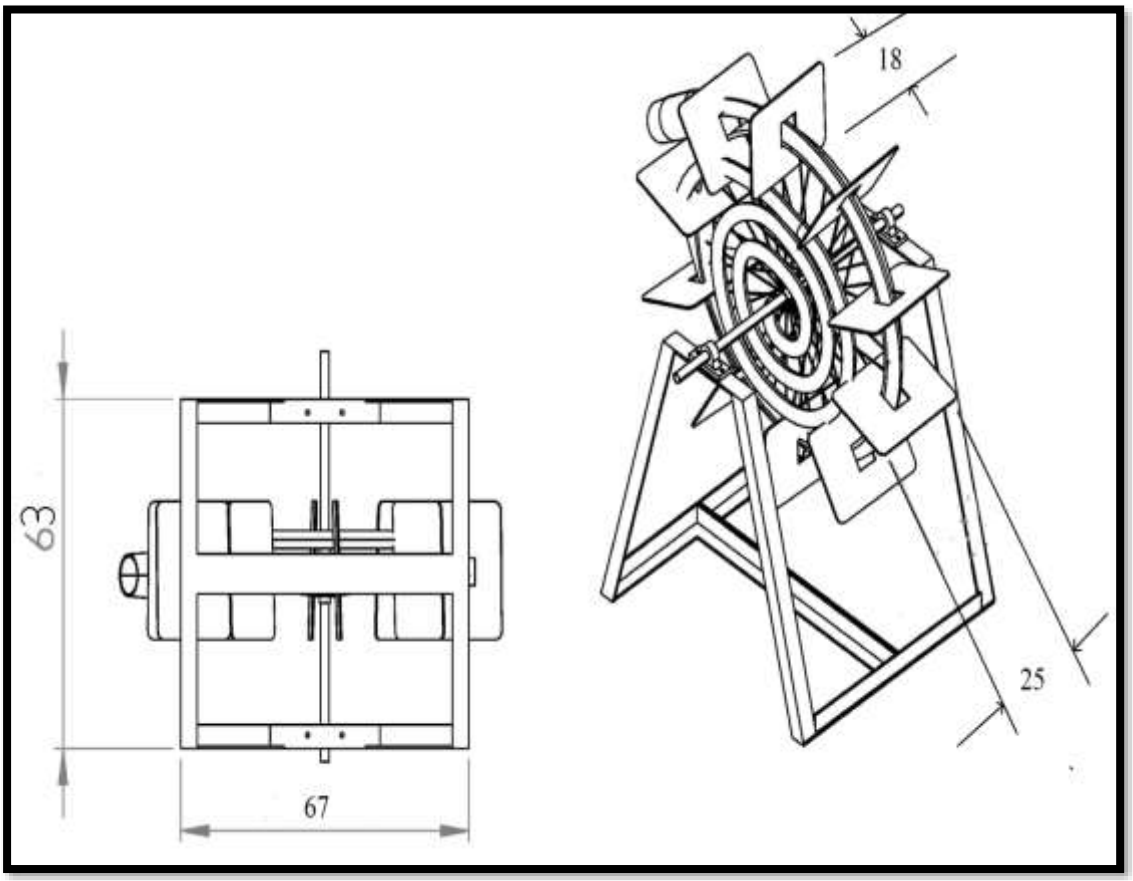

Fig. 3.6: Plan of spiral tube water wheel pumping system

3.2.2.3 Major components of spiral tube water wheel pumping system

3.2.2.3.1 Frame

The frame forms the main body of the spiral tube pumping system on which various components are assembled and it gives stability to the unit during the pump operation. The frame is adjustment to various water depths for requirement of maximum kinetic energy of water. It consist a suitable nut bolts. The rim, pipe and housing the frame. The isometric view is shown in Fig. 3.2 and engineering drawing with dimensions are shown in Fig. 3.3. It consists a angle frame mounted on four legs all made of steel angle are used to sizes system (3.81 x 3.81) and (3.81 x 3.81). The frame consists of the front portion on which the wheel is mounted at the centre. The overall dimension of the frame is 109.8 cm x 67 cm x 63 cm.

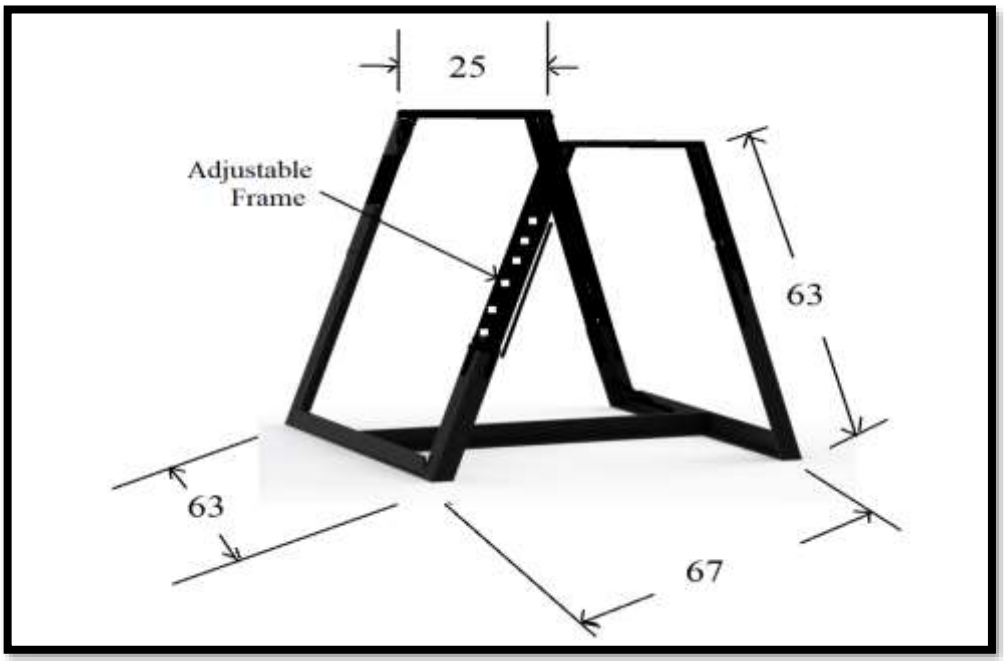

Fig. 3.7: Adjustable frame spiral tube pumping system

3.2.2.3.2 Rim: A part of a wheel to which the tire is attached and often forms part of the mechanism. Then assemble pipe over the spoke of the wheel. The dimension of rim is 63.5 cm diameter.

3.2.2.3.3 Flexible pipe: pipe to construct a spiral wheel. So that it could be flexible enough that we can turn it form a coil. And the same pipe to discharge the water form pump. The flexible pipe is shown in Plate 3.11.

3.2.2.3.4 Housing: Both of these hollow pipes are supported by hosing bearing which are mounted on stand, so that wheel will rotate continuously over stand by the force of the water. The dimension of housing is 2.5 cm diameter and length 74 cm. The housing is shown in Plate 3.12.

3.2.2.3.5 Hub The centre of a wheel contains bearings and in a traditional wheel has drilled flanges for attachment of spokes. The dimension of hub is 2.5 cm diameter ad length is 10 cm. The hub is shown in Plate 3.14.

3.2.2.3.6 Block Bearing: Simple Rotary block bearings hold rotating components such as housing. It is transfer axial and radial loads from the structure supporting it. The dimension of bearing is 2.5 cm inner diameter. The block bearing is shown in Plate 3.13.

3.2.2.3.7 Tee joint: Then attach this pipe to the Tee by means of nipple and attach one end of TEE of the wheel by welding and other end the hollow pipe

3.2.2.3.8 Union valve: rotary union valve most common use to connected one side rotating pipe and other side straight pipe.

Plate: 3.11 Flexible spiral pipe

Plate: 3.12 Housing (GI Pipe)

Plate: 3.13 Block Bearing (Ø 2.5 cm)

Plate: 3. 14 Rim Hubs (Ø 2.5 cm)

3.2.2.4 Working of Spiral Tube Water Wheel Pumping System

A spiral tube pumping system could be an effective way to provide water to a farm pond/open well from a nearby canal/nallah. Tube is fixed spirally in a wheel having rectangular plates in its periphery. The flowing water pushes the plates hence the wheel rotates. One end of tube is fixed with a large diameter inlet valve while the other end is attached in a housing at the centre of the pumping system.

Water enters from the inlet side and because of rotation of wheel, the water moves spirally inside the tube. The water reaches the centre of housing while the succeeding water pushes the preceding to go ahead; this way the water comes out from the housing, which is delivered toward the outlet. The spiral tube water wheel used to low head carrying water from hollow axel to 20 meter to 30 meter distance. As shown in Plate 3.15 the system is installed in the canal. As the canal water moves ahead it pushes the rectangular blades on the periphery of the wheel and rotates the wheel. The wheel carries the spiral tube with one end of it immersed in water in each rotation. This way the water enters inside the tube. The succeeding water pushes the preceding water. This action causes the water to enter the hollow shaft/housing and ultimately comes out from the other end.

Plate 3.15: Working of STWWPS at mandhar branch village: kendri

3.3 Discharge calculation of Parshall flume

The parshall flume is an open channel type measuring device that operates with a small drop in head, adopting the venture principle. The loss of head for free from limit is only about 25 % of that for weir. When the elevation of the water surface downstream from the flume is high enough to retard the rate of the discharge, the flow is considered submerged.

To determine the discharge, to scale, H_a and H_b are providing at the upstream and downstream section of the flume. Only H_a need to measure under free flow conditions. Free flow conditions are satisfied if the degree is percentage of submergence, as represented by the ratio H_a/H_b, is within the limits.

The flow rates (Q), in the 6-inch Parshall flume were computed using the formula

$$Q = CH_a^n$$

In which,

Q = Rate of flow, lps

C = 0.3812 (coefficient)

H_a = Head of first section, m

n = 1.58 (exponent, whose value depends only on the flume length.

Table 3.1: Dimensions and capacities of Parshall flumes (Free- flow) of various sizes

Throat Width	A	B	C	D	E	F
cm	cm	cm	cm	cm	cm	cm
15	41.4	61	39.4	39.7	61	30.5
7.5	31	45.5	17.8	26	45.5	15

G	K	N	X	Y	Free flow capacity (lps)	
cm	cm	cm	cm	cm	minimum	maximum
61	7.6	11.5	5.1	7.6	1.4	110.8
30.5	2.5	5.7	2.5	3.8	0.85	28.4

(Source: Michael, 2009)

Fig. 3.8: Discharge measurement of parshall flume

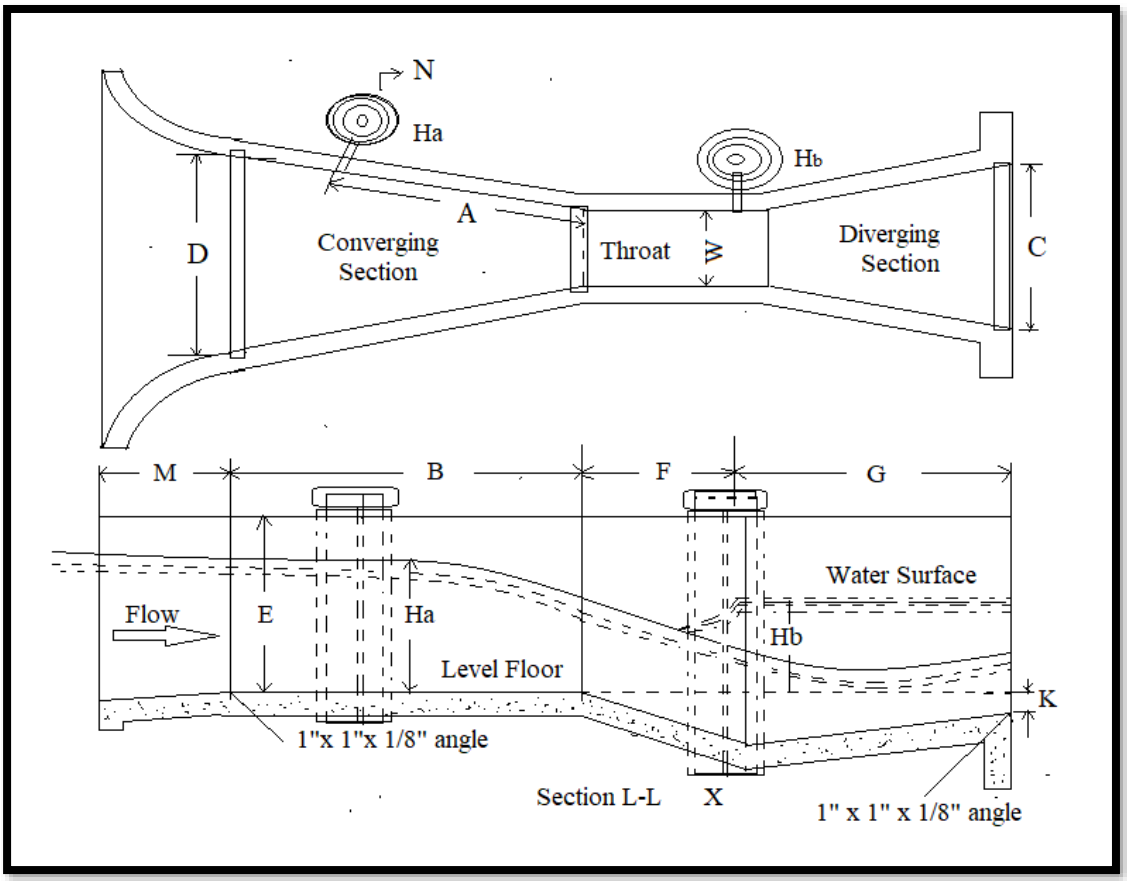

Fig. 3.9 Plan and elevation of a parshall flume showing component parts

(Source: Michael, 2009)

3.4 Fabrication work of water wheel Operated pumping system

Two different types of pumping system viz. cup type water wheel pumping system (CTWWPS) and spiral tube water wheel pumping system (STWWPS) have been developed. The major components of CTWWPS include cart wheel, axel, cups, bearing, hub pulley and belt. Similarly, the major components of STWWPS include rim, inlet valve, housing, flexible pipe, block bearing, tee joint, union & valve. Fabrication of different component is shown on plate 3.16, 3.17, 3.18 and 3.19.

Plate 3.16 Assemble component

Plate 3.17 Fabrication of CTWWPS

Plate 3.18 Welding work on STWWPS

Plate 3.19 Fabrication of housing

3.5 Test procedure of developed water wheel pumping system

3.5.1 Measurement of suction head

The depth of static water level in the water source was measured directly by a graduated tape from centre of the eye of impeller/pump to the static water level.

3.5.2 Measurement of delivery head

The height of discharge water level in the laboratory test/field test water was measured directly by a graduated tape centre of the eye of impeller/pump to the top of the delivery pipe.

3.5.3 Measurement of RPM

RPM is used to indicate the speed of something by saying how many times per minute it will go round in a wheel. RPM is an abbreviation for 'revolutions per minute. It was depend upon kinetic energy of water. RPM of water wheel has been measured using a tachometer.

3.5.4 Determination of pump speed

The speed up ratio between wheel and pump pulley was 13 times. Therefore, the pump speed in terms of RPM was calculated by multiplying the RPM of wheel by 13.

3.5.5 Determination of pump discharge

Volumetric method was used to measure pump discharges. A graduated bucket was filled for a known period of time and the time was measured with a stopwatch. The pump discharge was calculated by dividing the amount of water by the measured time in litre per minutes (lpm). For each suction head numbers of three trial data were taken.

3.6 Testing of Water Wheel Pumping System

3.6.1 General Operational Testing

Preliminary performance testing was conducted to give an initial estimate of the pump's performance so that suitable testing procedures and apparatus could be determined. Plate 3.20 shows the experimental set-up for the preliminary testing. It was found that at some pumping head, that a 20 litter bucket could easily be filled in less than 60-65 seconds a flow rate of over 20 l/min.

3.6.2 Performance testing Water Wheel Pumping System

The CTWWPS and STWWPS were tested at different water head and was

operated by kinetic energy of flowing water. Average discharge (Q), were then calculated. The results of the experimentation have been presented as a graph and each point on a graph represents an average of three discharge rate if all three were within ±10 per cent of their average. This Waterwheel operated pump system is tested at different places at different head conditions viz. fisheries dam, Mandhar branch canal Tulsi and other canal command area which is shown in Plate 3.20

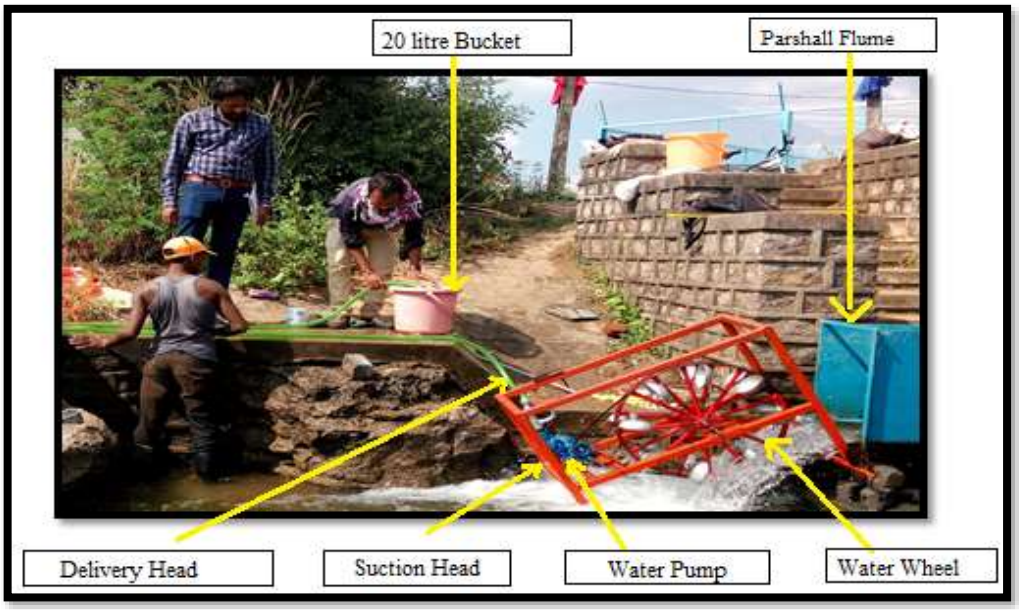

Plate 3.20: Testing of cup type water wheel pumping system at fisheries dam

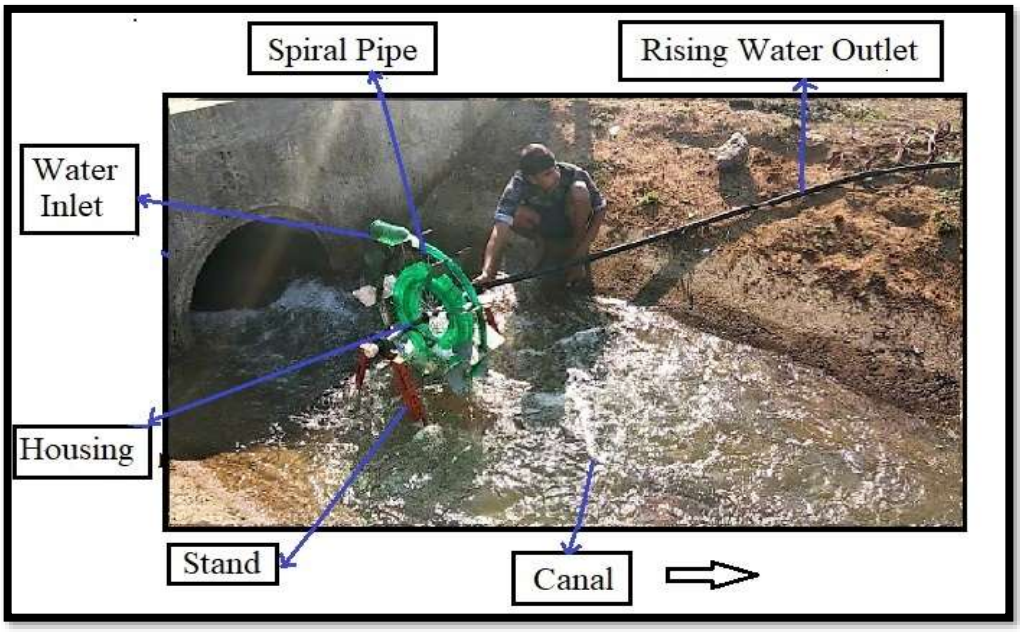

Plate 3.21: Testing of spiral tube water wheel pumping system at village: kendri

3.7 Setup of Developed Pumping System for Operating CTWWPS and STWWPS

The complete setup for operating waterwheel and spiral tube pumping system are shown in plate 3.20 and plate 3.21 respectively. In this complete setup is based on utilization of kinetic energy for lifting and carrying water to near farm and pond.

3.7.1 Apparatus

The following equipment was needed to conduct the testing:

· Stopwatch

· Waterwheel Operated pumping system

· Suction pipe with foot valve

· Delivery pipe

· Pipe clamp to fill supply pipe with water from tap

· Measuring tape to measure depth of water in measuring bucket

· Measuring (delivery) bucket (20 litre)

. Tachometer (measure rpm of pumping system)

. Gumboot and gloves.

3.7.2 Procedure

1. Fill supply pipe with water and place above ground level.
2. Set up water wheel pump in pumping mode as detailed
3. Fit foot valve into inlet pipe and submerge at the bottom of the supply pipe.
4. Remove air from outlet pipe to ensure flow is not restricted.
5. Place measuring bucket on the ground next to assistant (This is pumping to a head at different head as the measured pumping head is the difference in elevation between the free surface of the water in the supply pipe and the outlet pipe nozzle).
6. The opened gate to flow water at a constant rate and when flow becomes steady, put outlet pipe nozzle over the measuring bucket and start the stopwatch.

9 Second removes the outlet pipe nozzle from over the measuring bucket, then close gate.

8. Measure and record the depth of store water in the measuring bucket to calculate the flow rate and then empty it.

9. Repeat steps twice 6-8 for reliability.

10. Repeat steps 6-9 with the different head of water.

11. Raise measuring bucket into first testing level overhead

12. Repeat steps 6-10.

13. Continue repeating steps 6-10 until the top testing level has been reached or the waterwheel cannot provide enough power to lift the water to the required height, whichever

3.8 Power requirement in pumping System

3.8.1 Kinetic Energy

The energy possessed by moving water by virtue of its flow (motion). The kinetic energy of moving water is more useful in applications like the open flow when it is expressed as kinetic energy per unit volume. the kinetic energy of water is utilize to irrigation and fisheries.

$$\text{K.E.(Joule)} = \frac{1}{2} m.v^2$$

Where,

m = Mass, kg

v = Velocity m/sec

3.8.2 Friction loss

In fluid flow, friction loss is the loss of head or pressure that occurs in pipe due to effect of the fluids velocity near the surface of the pipe. The pipeline system, head loss due to friction in the pipeline and other factors must be taken into account. Loss of the head due to friction in the pipe between two points in the pipe at a distance *l* apart in given by the formula.

The darcy- weisbach equation is which related the loss of head, due to friction along a given length of pipe to the average velocity of fluid flow for an in compressible fluid.

$$h_f = \frac{4flv^2}{2gd}$$

In which,

h_f = head loss at pipe (m)

f = coefficient of friction of pipe (dimensionless)

l = length of pipe, m

v = velocity of water in pipe (m/sec.)

d = diameter of pipe

g = acceleration due to gravity (9.81 m/$sec.^2$)

Plate 3.22: Setup on developed of cup type waterwheel pumping system

Plate 3.23: Setup on developed spiral type water wheel pumping system

3.9 Cost Analysis

Cost analysis is very important in any new technology development machine. Cost analysis consist of

1. Fixed cost
2. Variable cost

3.9.1 Fixed Cost

Fixed cost is defined as one, which not changed when level of output alters. Fixed cost comprises those costs, which have to bear regardless of the machine is used *viz.* depreciation, interest on tax and investment. Fixed costs are fixed in total but decline as the annual use of machine is increased.

(a) Depreciation Cost
(b) Interest
(c) Insurance

3.9.1.1 Depreciation Cost

This cost reflects the reduction of the value of the machine with use (wear) in time. The depreciation cost was calculated using formula based on straight-line method.

$$\text{Depreciation (D)/hr} = \frac{C-S}{L \times H}$$

Where,

D = Depreciation cost, average per hour
C = Capital cost, Rs
S = Salvage value, Rs
L = Life of machine in year
H = No. of Working hours per year

3.9.1.2 Interest

An annual charge of interest was calculated on the basis of actual rate of interest payable and average purchase price by the following formula:

$$\text{Interest (I)/hr} = \frac{c+s}{2} \times \frac{i}{H}$$

Where,

i = rate per year

3.9.1.3 Shelter and Insurance Cost

Shelter is necessarily required against weather changes; shelter cost has been calculated at 2% of the average purchase price

$$Sc = \frac{C+S}{2} \times \frac{i}{H}$$

Where,

i = rate per year

3.9.2 Variable Cost

Variable costs are costs that change as the quantity from output. Generally variable costs increase at a constant rate relative to Capital and labour. Variable costs may include wages, repair and maintenances, utilities used in machine.

3.9.2.1 Repair and maintenance cost

3.9.2.2 Labour wages

Therefore,

Total Variable Cost (TVC) = Fuel cost + Repair and Maintenance cost + Lubrication cost + Labour wages

CHAPTER – IV

RESULTS AND DISCUSSION

This chapter contains the results and discussion of the experiment conducted in order to fulfil the objective of the study. Experiment was carried out during the year 2018-19. The present research work is carried out in the field of Krishi Vigyan Kendra, Raipur, I.G.K.V., Raipur (C.G.) and Mandher Branch Canal Tulasi and Mandher Branch Canal Kendri (C.G.) and other suitable locations of canal command area in Chhattisgarh state.

Review suggests that at least 1m of head up water in upstream side and flowing water directly striking the cups of wheel creates optimal condition. It was found that variation of upstream depth affecting the discharge very much. Testing at different heads of flowing water and suction head and delivery head and carrying of water from outlet to varying discharge was done. It was found that at some pumping head, that a 20 litter bucket could easily be filled in less than 60-65 seconds a flow rate of over 20 l/min. The pump was easily able to cope when an operator was lifting up the delivery pipe around 1.25 m.

Each test was repeated thrice and in each case, operation period, discharge was measured and average discharge was worked out. The results of the experimentation have been presented in the form of graph and each point on a graph represents an average of three discharge rate.

The performance results are shown and described in this chapter. The performance were evaluated in the terms of suction head, delivery head, pump speed and pump discharge.

4.1 Development of pumping systems based on kinetic energy of water

The pumping system has been developed as per the methodology and procedure adopted in article 3.2 through 3.

4.1.1 Development of Cup Type Water Wheel Pumping System

The pumping system has been developed as per the methodology and procedure in adopted in article 3.1 through 3.1.1.

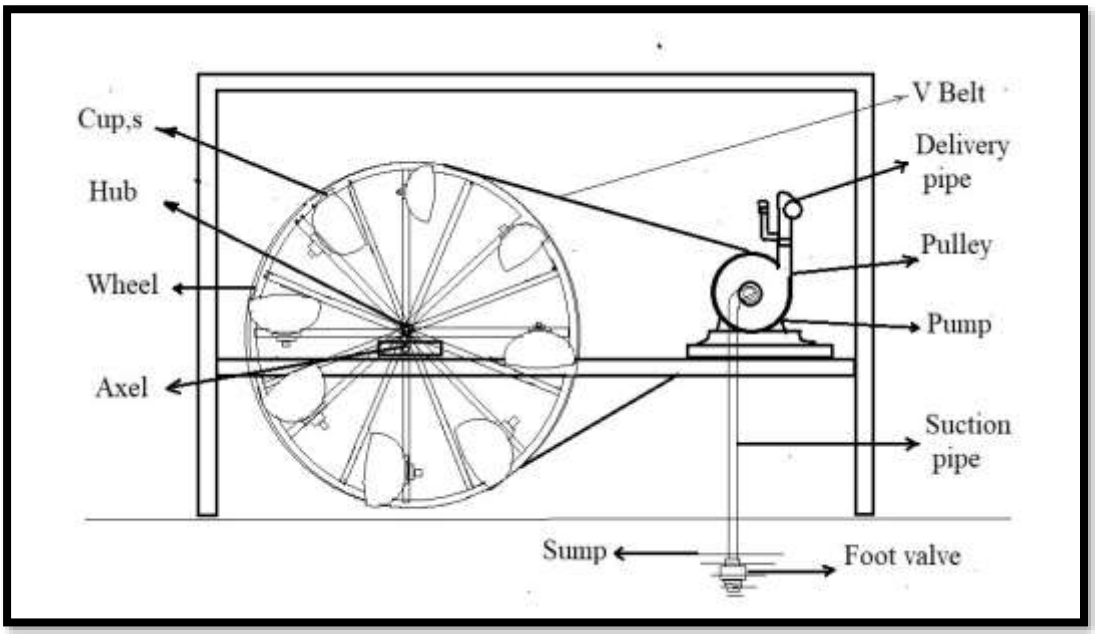

Figure 4.1: Cup Type Water Wheel Pumping System

Table 4.1: RPM generated at the pump pulley by an average flow of water

S. No.	Average flow operated per minute	RPM	
1	Water wheel	= 102 x 1	102
2	Pump pulley	= 102 x 13	1326
	(1 revolution of rim = 13 revolution of pump pulley)		

The developed pumping system is shown in Fig. 4.1 with its operating RPM in Table 4.1. The developed pumping system is then subjected to testing for operating a centrifugal pump based on kinetic energy of water released from check dam and canal regulator. The details of testing had been presented under article 3.5.

4.1.2 Development of Spiral Tube Water Wheel Pumping System

The pumping system has been developed as per the methodology and procedure in adopted in article 3.2 through 3.2.1.

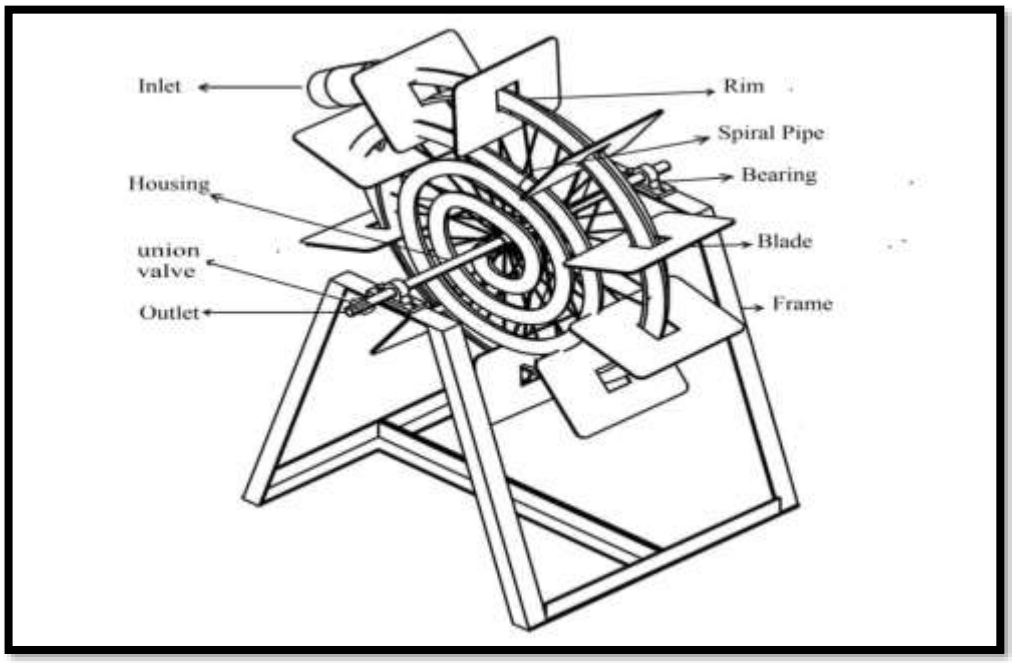

Figure 4.2: Spiral Tube Water Wheel Pumping System

4.2 Utilization of kinetic energy of water from parshall flume

The Parshall flume has been installed in fisheries check dam, Krishi Vigyan Kendra, Raipur, I.G.K.V., Raipur (C.G.). It is accurate, entails a minimum of head loss and is self-cleaning. Again, under normal operating conditions, the discharge can be determined with an accuracy of 2 to 5 per cent.

Discharge through the flume is called “free flow”, which occurs when the water elevation downstream is not high enough to affect flow conditions upstream. Only the upstream depth needs to be measured to calculate the flow rate. The details are given as article 3.3.

The flow depth condition in the nallah varied significantly. From study point of view the flow depth 0.23 to 0.31m, 0.32 to 0.43 m and 0.45 to 0.59 m has been marked as lower, medium and high depth recording of flow through the flume.

When the upstream depth is varying from 0.23 to 0.30 it was seen that the discharge is varying from 37.02 to 59.50 lps and finally kinetic energy of water varying from 7.09 to 12.85 joule. So, it was found that variation in upstream depth affecting the discharge very much. This is show in Fig. 4.3.

Table 4.2 Relation between discharge and lower depth of flow of parshall flume

S. No.	H_a (m)	H_b (m)	Discharge (lps)	Area (m^2)	Velocity (ms^{-1})	Mass (kg)	K.E. (Joule)
1.	0.23	0.15	37.02	0.06	0.61	37.02	7.09
2.	0.25	0.17	42.60	0.07	0.62	42.60	8.24
3.	0.27	0.20	49.10	0.08	0.63	49.01	9.52
4.	0.29	0.22	53.26	0.08	0.64	53.92	10.52
5.	0.30	0.23	59.50	0.09	0.66	59.50	12.85

When the upstream depth is varying from 0.32 to 0.43 it was seen that the discharge varying from 64.44 to 104.66 lps and finally kinetic energy of water 13.38 to 32.96 joule. So, it was found that variation in upstream depth affecting the discharge very much. This is show in Fig. 4.4.

Table 4.3 Relation between discharge and medium depth of flow of parshall flume

S. No.	H_a (m)	H_b (m)	Discharge (lps)	Area (m^2)	Velocity (ms^{-1})	Mass (kg)	K.E. (joule)
1.	0.32	0.25	64.44	0.10	0.64	64.44	13.38
2.	0.35	0.26	73.56	0.10	0.71	73.56	18.30
3.	0.38	0.28	82.53	0.11	0.75	82.53	23.23
4.	0.41	0.30	92.83	0.12	0.77	92.83	27.77
5.	0.43	0.34	104.66	0.13	0.79	104.66	32.96

When the upstream depth is varying from 0.45 to 0.59 it was seen that the discharge; varying from 109.55 to 168.31 lps and finally kinetic energy of water varying from 33.54 to 66.75 joule. So, it was found that variation in upstream depth affecting the discharge very much. This is show in Fig. 4.5.

Table 4.4 Relation between discharge and higher depth of flow of parshall flume

S. No.	H_a (m)	H_b (m)	Discharge (lps)	Area (m^2)	Velocity (ms^{-1})	Mass (kg)	K.E. (joule)
1.	0.45	0.36	109.55	0.14	0.78	109.55	33.54
2.	0.49	0.38	124.22	0.15	0.83	124.22	42.82
3.	0.54	0.42	143.53	0.16	0.87	143.53	54.33
4.	0.57	0.45	155.96	0.18	0.88	155.96	60.43
5.	0.59	0.48	168.31	0.19	0.89	168.31	66.75

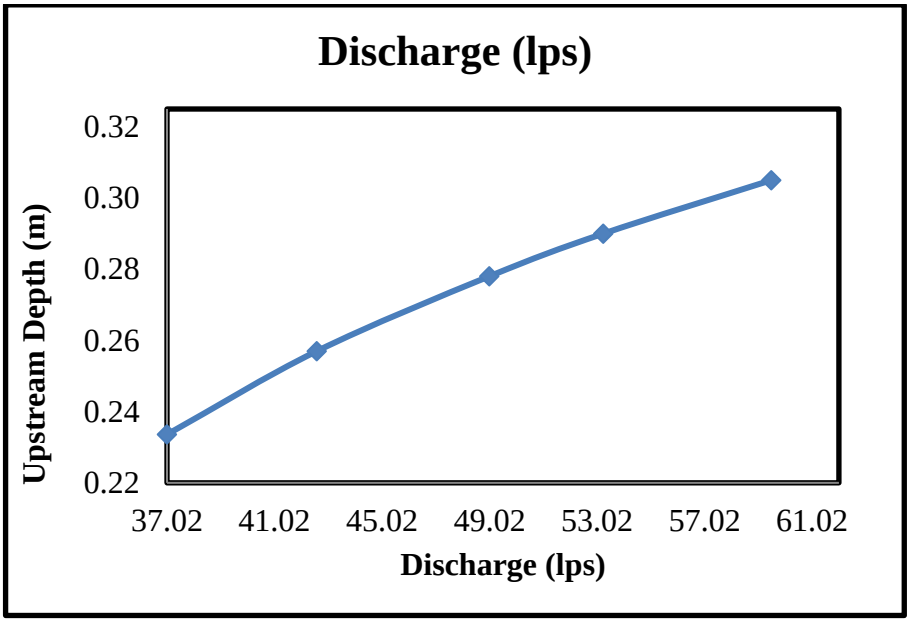

Fig. 4.3 Relationships between Discharge and Lower Upstream Depth

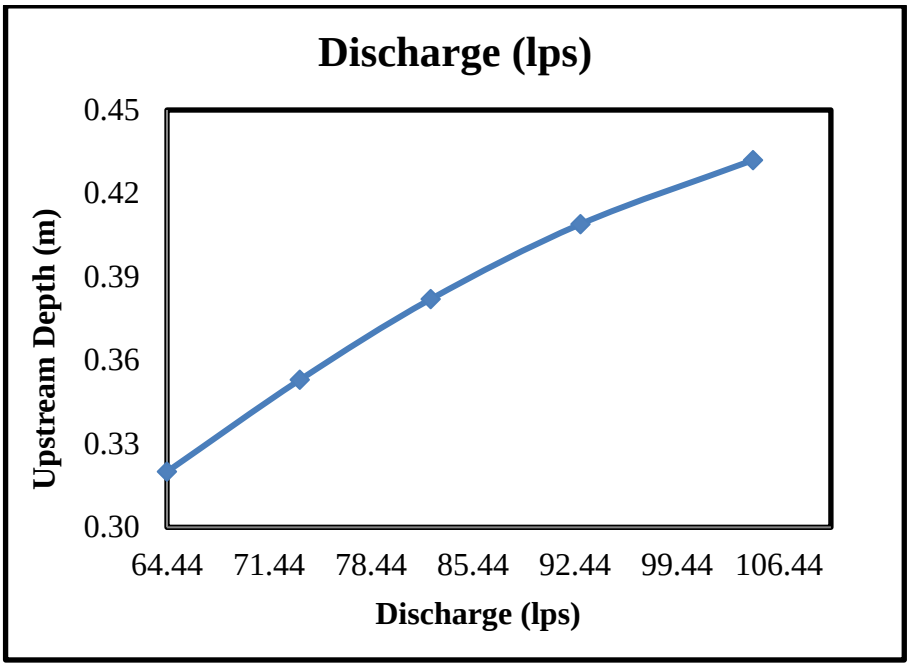

Fig. 4.4 Relationships between Discharge and medium Upstream Depth

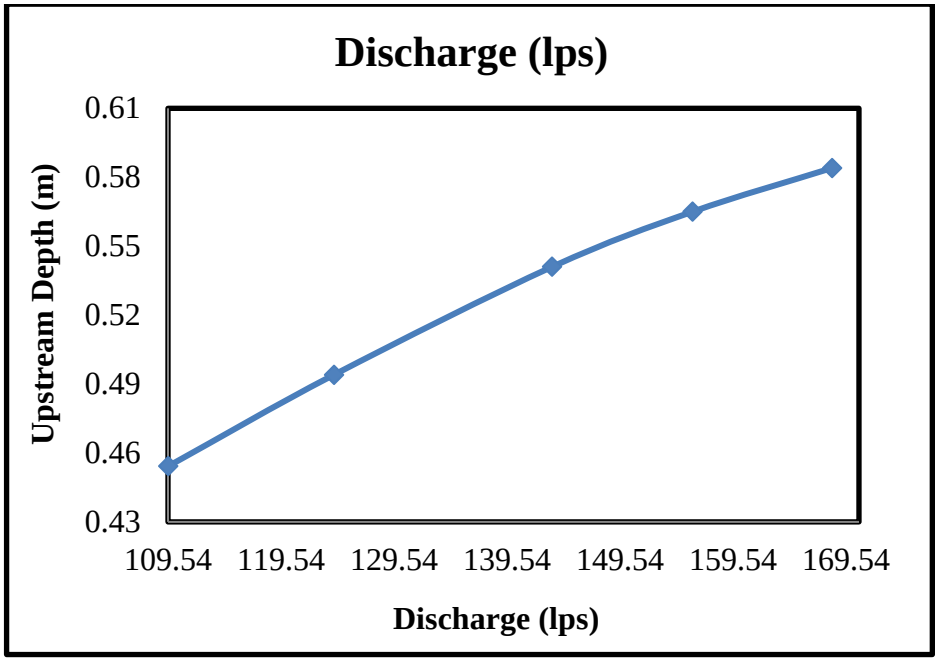

Fig. 4.5 Relationships between Discharges and Higher Upstream Depth

4.3 Testing and performance evaluation of developed pumping systems for lifting and carrying water

The developed pumping systems has been tested independently in different sites in the field of Krishi Vigyan Kendra, Raipur, I.G.K.V., Raipur (C.G.) and other suitable locations of canal command area in Chhattisgarh state under varying suction head and delivery head condition. The details are given in article 3.5.

In waterwheel operated water pumping system when wheel is operated by kinetic energy of water then kinetic energy is transferred into mechanical energy and this energy is transfer to belt drive, from kinetic energy is transfer to wheel, from wheel it is transfer to Pulley, from pulley energy is transmitted to pump by shaft.

This developed water wheel operated pumping system was tested on different heads for calculating its performance. The following Table 4.2 gives its performance at different heads.

When the suction head (0.56 m) is constant and the delivery head is varying from 0.70 m to 1.30 m it was seen that the discharge varying from 0.364 to 0.178 lps is decreasing as the delivery head increasing. So, it was found that variation in delivery affecting the discharge very much. This is show in Fig. 4.6

Table 4.5: Testing of pump discharge at constant suction head (0.56 m) and varying delivery head

S. No	H_a (m)	H_b (m)	Wheel RPM	Pulley RPM	Suction Head (m)	Delivery Head (m)	Total Head (m)	Dis-charge (lps)	Dis-charge (lpd)
1.	0.30	0.23	98	1274	0.56	0.70	1.33	0.364	31449
2.	0.29	0.22	98	1274	0.56	0.90	1.52	0.342	29548
3.	0.27	0.20	97	1261	0.56	1.10	1.72	0.303	26179
4.	0.25	0.17	95	1235	0.56	1.20	1.81	0.248	21427
5.	0.23	0.15	94	1222	0.56	1.30	1.91	0.178	15379

When the suction head varying from 0.22 m to 0.56 m and delivery head varying from 0.70 m to 1.30 m it was seen that the discharge varying from 0.389 to 0.192 lps is decreasing as the discharge head increasing. So, it was found that variation in suction and delivery affecting the discharge very much. This is show in Fig. 4.7

Table 4.6: Testing of pump discharge at varying suction and varying delivery head

S. No	H_a (m)	H_b (m)	Wheel RPM	Pulley RPM	Suct. Head (m)	Delivery Head (m)	Total Head (m)	Dis-charge (lps)	Dis-charge (lpd)
1.	0.43	0.34	100	1300	0.22	0.70	0.99	0.389	33609
2.	0.41	0.30	100	1300	0.30	0.90	1.27	0.372	32140
3.	0.38	0.28	99	1287	0.42	1.10	1.58	0.321	27734
4.	0.35	0.26	98	1274	0.50	1.20	1.75	0.262	22636
5.	0.32	0.25	96	1248	0.56	1.30	1.91	0.192	16588

When the suction head varying from 0.22 m to 0.56 m and delivery head constant (1 m) it was seen that the discharge varying from 0.378 to 0.267 lps is decreasing as the delivery head increasing. This is shown in Fig. 4.8.

Table 4.7: Testing of pump discharge at varying suction head and constant delivery head (1 m)

S. No	H_a (m)	H_b (m)	Wheel RPM	Pulley RPM	Suct. Head (m)	Delivery Head (m)	Total Head (m)	Dis-charge (lps)	Dis-charge (lpd)
1.	0.59	0.48	102	1326	0.22	1	1.29	0.378	32659
2.	0.57	0.45	101	1313	0.3	1	1.37	0.362	31276
3.	0.53	0.41	99	1287	0.42	1	1.48	0.332	28684
4.	0.49	0.38	98	1274	0.5	1	1.56	0.298	25747

5.	0.45	0.36	97	1261	0.56	1	1.61	0.267	23068

At constant suction head 0.56 m, constant delivery head 0.17 m and varying carrying water from 0 to 30 m, the discharge varies from 0.342 to 0.279 lps. So, it was found that variation in delivery affecting the discharge very much. This is show in Fig. 4.9

Table 4.8: Testing of pump discharge at Constant suction head and varying distance carying of water

S. No	H_a (m)	H_b (m)	Wheel RPM	Pulley RPM	Suct. Head (m)	Deli. Head (m)	Dis-tance (m)	Dis-charge (lps)	Dis-charge (lpd)
1.	0.44	0.35	100	1300	0.56	0.17	0	0.342	29548
2.	0.39	0.29	98	1274	0.56	0.17	10	0.329	28425
3.	0.32	0.24	97	1261	0.56	0.17	20	0.308	26611
4.	0.28	0.19	96	1248	0.56	0.17	30	0.279	24105

At the varying suction head from 0.25 m to 0.56 m, constant delivery head 0.17 m and horizontal distance travel from 0 to 30 m, discharge varies from 0.392 to 0.279 lps. So, it was found that variation in delivery affecting the discharge very much. This is shown in Fig. 4.10

Table 4.9: Testing of pump discharge at varying suction head and Varying Distance carrying of water

S. No	H_a (m)	H_b (m)	Wheel RPM	Pulley RPM	Suct. head (m)	Deli. Head (m)	Distance (m)	Dis-charge (lps)	Dis-charge (lpd)
1.	0.44	0.35	102	1326	0.25	0.17	0	0.392	33868
2.	0.39	0.29	99	1287	0.38	0.17	10	0.367	31708
3.	0.32	0.24	98	1274	0.45	0.17	20	0.331	28598

4.	0.28	0.19	96	1248	0.56	0.17	30	0.279	24105

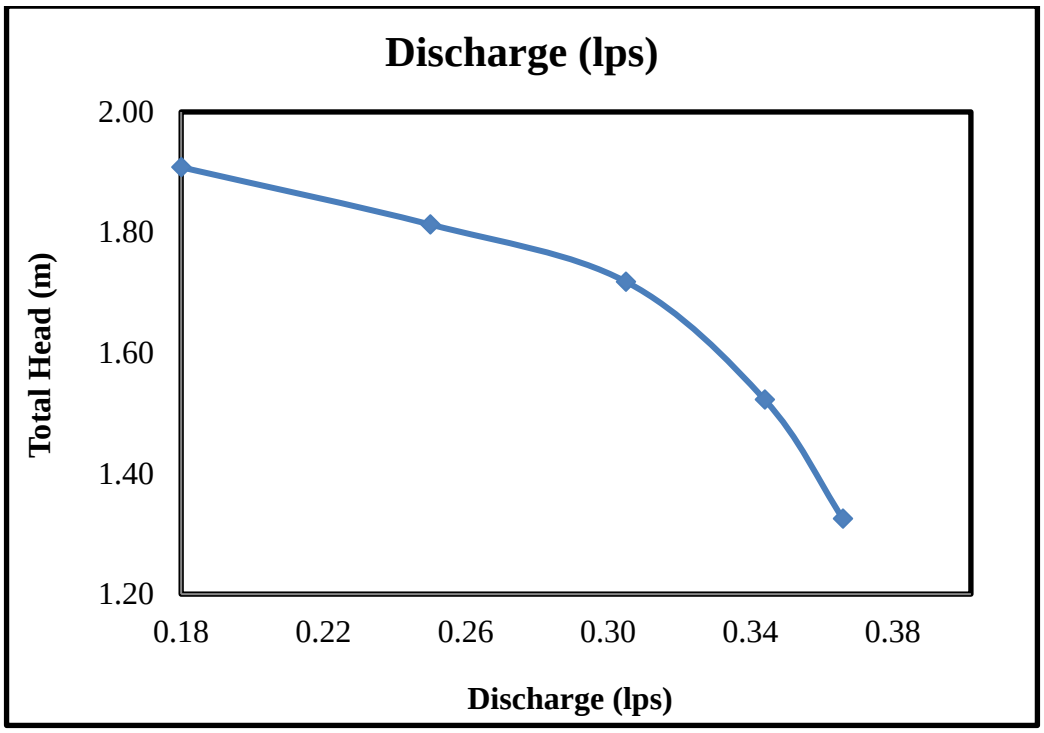

Fig. 4.6: Discharge Vs head relationship at constant suction head and varying delivery head

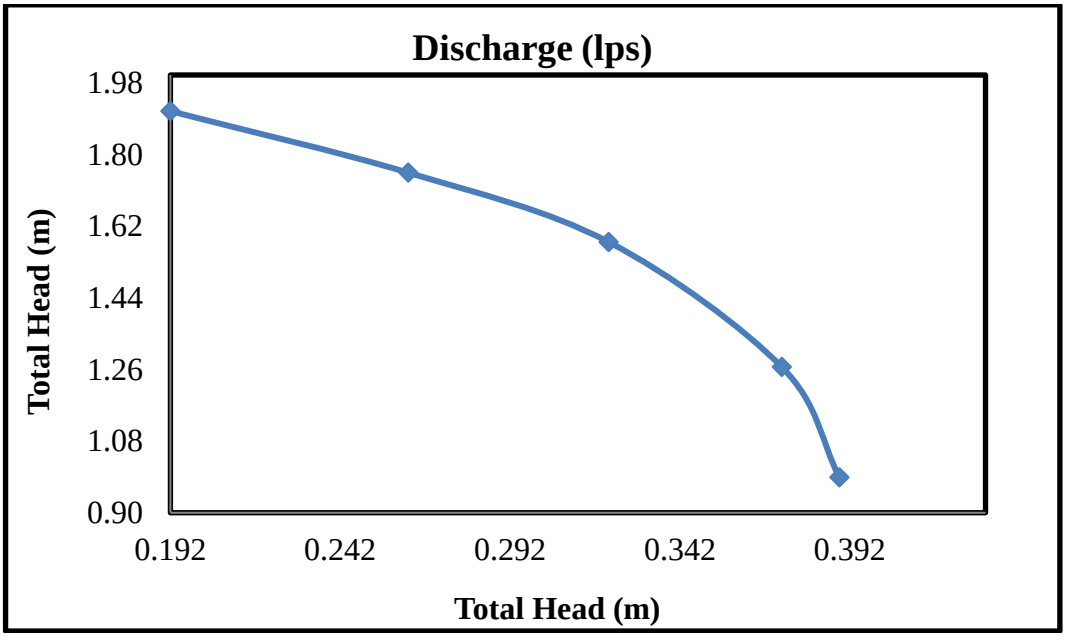

Fig. 4.7: Discharge Vs head relationship at varying suction and delivery head

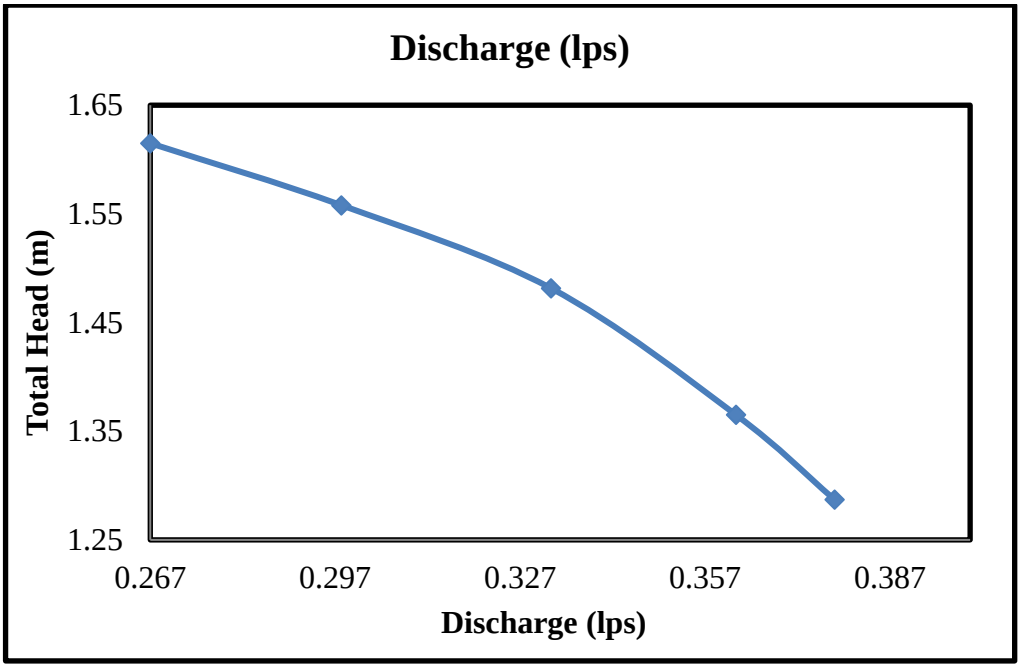

Fig. 4.8: Discharge Vs head relationship at varying suction head and Constant delivery head

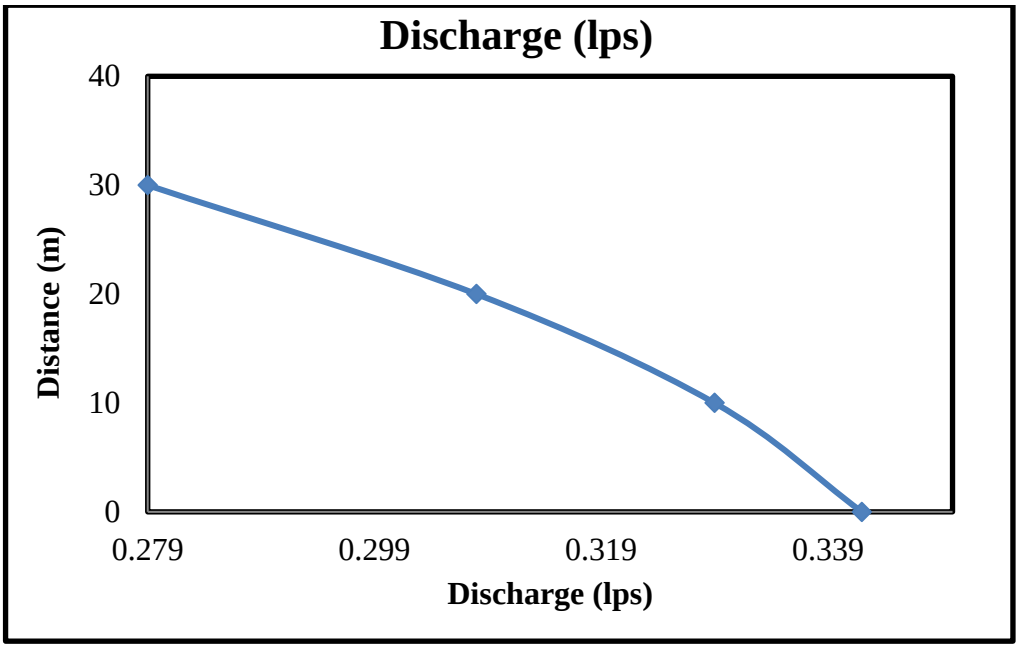

Fig. 4.9 Discharge Vs distance carrying of water relationship at Constant suction head

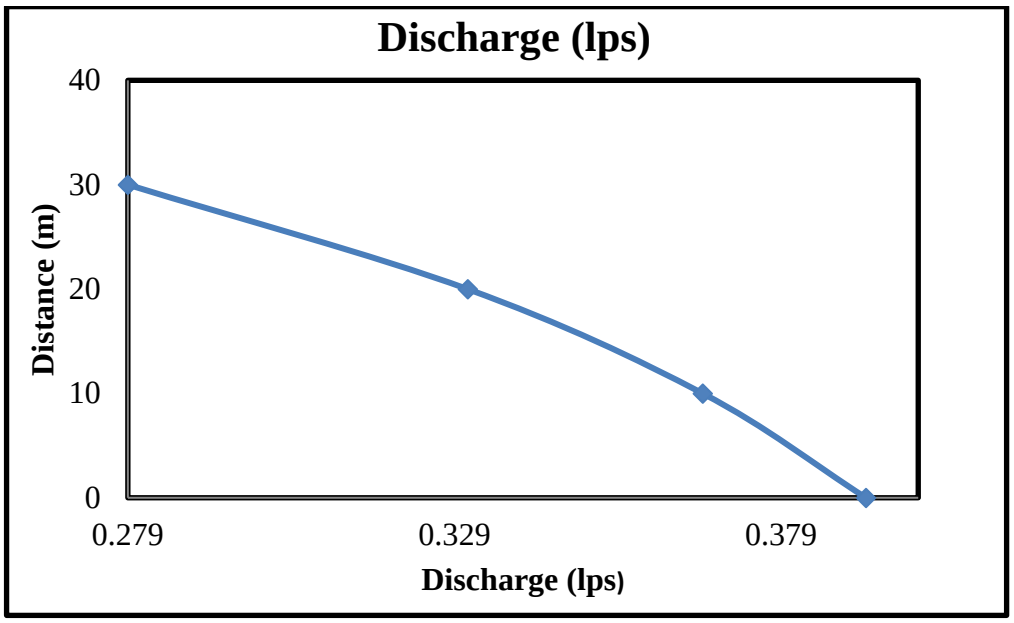

Fig. 4.10 Discharge Vs Distance relationship at Varying suction head and Varying Distance carrying of water

4.4 Performance evaluation of spiral tube pumping system for carrying water

The spiral tube pumping system, as per its name it includes water wheel. It rotates due to force of water flow which is act on blade of wheel. Due to rotation of wheel the spiral tube take water in at one end of wheel which is open is at periphery of wheel. This water passes towards the centre of wheel into the coil as per revolution of wheel. From this centre of hollow axel we get water discharge as outlet.

The developed pumping systems has been tested independently in different sites and canal command areas with varying different water depth condition while the developed pumping system based on kinetic energy of water has been tested in the field of Mandher Branch Canal Kendri and Mandher Branch Canal Tulasi (C.G.) and other suitable locations of canal command area in Chhattisgarh state.

The developed small spiral tube pumping system was tested on different water depth for calculating its performance. The following Table 4.10 shows the performance at different depths.

When the water depth varies from 0.30 m to 0.46 m and velocity of water varying from 0.41 to 0.54 ms^{-1}, it was seen that the discharge varying from 0.114 to 0.193 lps is increasing as the water velocity to increasing discharge. So, it was found that velocity affecting the discharge very much. This is show in Fig. 4.11.

Table 4.10: Testing of pump discharge varying water velocity with 1 m distance of carrying water

S. No.	Water Depth (m)	Water Velocity (ms^{-1})	Wheel RPM	Distance (m)	Discharge (lps)	Discharge (lpd)
1.	0.30	0.41	23	1	0.114	9849
2.	0.34	0.45	25	1	0.129	11145
3.	0.38	0.48	26	1	0.147	12700
4.	0.42	0.52	28	1	0.172	14860
5.	0.46	0.54	29	1	0.193	16675

When the water depth varying from 0.30 m to 0.46 m and velocity of water varying from 0.41 to 0.54 ms^{-1} and distance carrying water 10m then it was observed that the discharge varying from 0.070 to 0.098 lps, which was increasing as the discharge water velocity increasing. So, it was found that variation in velocity affecting the discharge very

Table 4.11: Testing of pump discharge varying water velocity with 10 m distance of carrying water

S. No.	Water Depth (m)	Water Velocity (ms^{-1})	Wheel RPM	Distance (m)	Discharge (lps)	Discharge (lpd)
1.	0.30	0.41	23	10	0.070	6022
2.	0.34	0.45	25	10	0.074	6419
3.	0.38	0.48	26	10	0.081	6972
4.	0.42	0.52	28	10	0.088	7594
5.	0.46	0.54	29	10	0.098	8467

When the water depth varying from 0.30 m to 0.46 m and velocity of water varying from 0.41 to 0.54 ms^{-1} and distance carrying water 20m.it was seen that the discharge varying from 0.050 to 0.076 lps, which was increasing as the discharge water velocity increasing. So, it was found that variation in velocity affecting the discharge very much. This is show in Fig. 4.13

Table 4.12: Testing of pump discharge varying water velocity with 20 m distance of carrying water

S. No.	Water Depth (m)	Water Velocity (ms^{-1})	Wheel RPM	Distance (m)	Discharge (lps)	Discharge (lpd)
1.	0.30	0.41	23	20	0.050	4354.
2.	0.34	0.45	25	20	0.055	4717
3.	0.38	0.48	26	20	0.058	5028
4.	0.42	0.52	28	20	0.065	5650
5.	0.46	0.54	28	20	0.076	6566

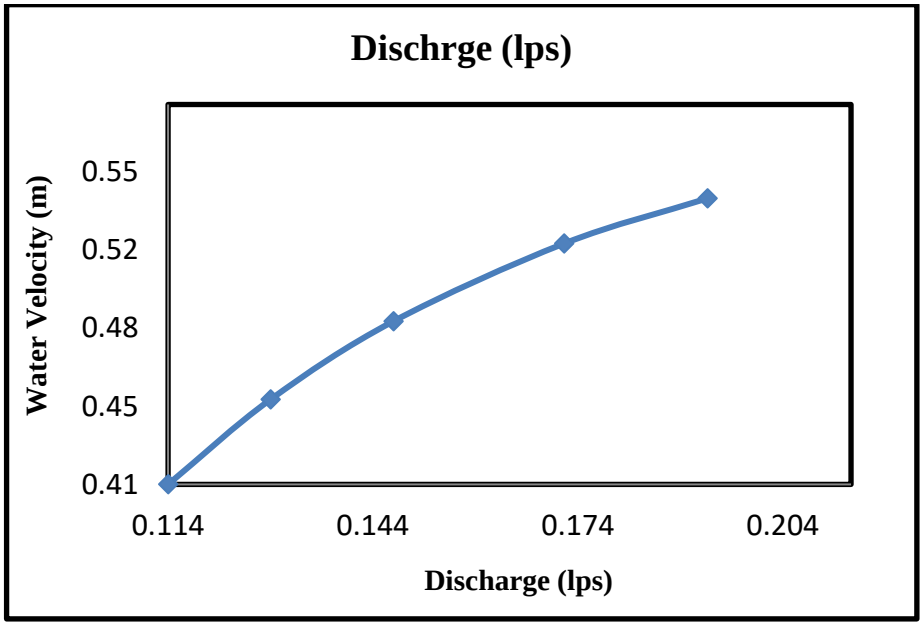

Fig. 4.11 Relationship between Discharge Vs Canal water velocities

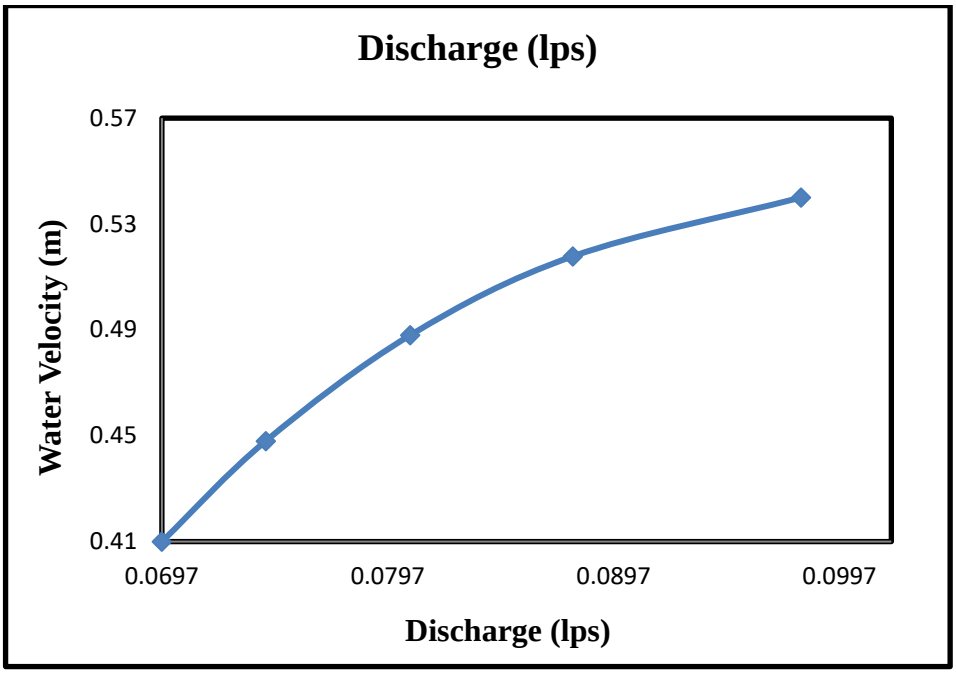

Fig. 4.12 Relationship between Discharge Vs Canal water velocities

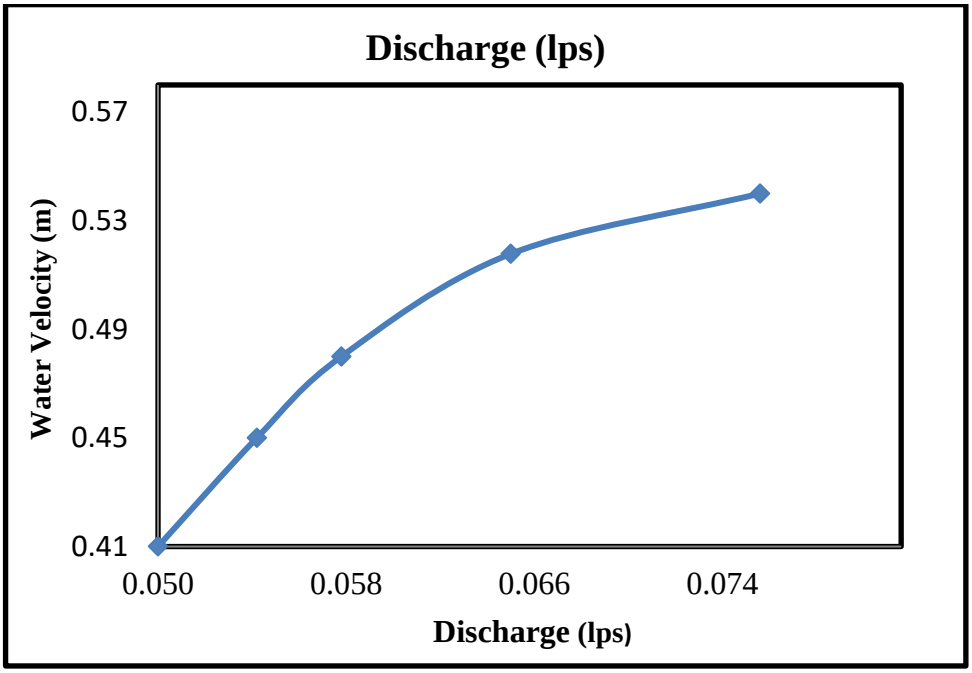

Fig. 4.13 Relationship between Discharge Vs Canal water velocities

4.5 Economic Analysis

Economical evaluation is a systematic valuation of the inputs and outcomes of two are more than two alternative activities, and the comparative analysis of these. The objective of economic evaluation is to evaluate the best course of action.

Kinetic energy powered pumping system can be used for irrigations or for delivering water: however it is depended on flowing water, but it does not create any environmental hazards and energy conservation efficiency and operating costs are less. While Electricity and Diesel powered pumping system has a cheap capital cost; but it is a more energy consumption.

Solar pumping system has a high initial cost but it is considerably low efficiency and requires much maintenance. On the other hand, water wheel powered pumping system is almost completely opposite. The use of water wheel powered pumps can decrease the input cost up to minimum. Water wheel pumps are an attractive alternative technology for diverting water.

Performance evaluation of pumping system to varying water depth, it was found that average discharge of pumping system is 32054 lpd. Hence, the comparison was made with a fixed volume of pumping of 3054 lpd. In this estimation measurement of discharge is compared to electric, diesel and solar pump. It was seen that varying of working hour of pump on per day and also varying total cost estimation on per day. It was found that a diesel engine pumping system is costly as compare to electrical, solar and water wheel pumping system. The comparative economic evaluation is shown in Table 4.13 while the detailed calculation is given in appendix E.

As seen from Table 4.13 it is clear that with fixed volume of pumping 32054 lpd, the minimum cost is with the water wheel system. The important constraint with the system is that it is very much depends on site specific conditions.

Table 4.13: Economical evaluation of pumping system

Reading	Cost Analysis of Pumping System			
	Water Wheel	Electric Pump	Diesel Pump	Solar Pump
Discharge (lpd)	32054	32054	32054	32054
Working Hour	24	16	2.8	6.8
Annual Usage, h	8760	5840	1022	2482
Life Cycle, y	10	8	10	25
Capital Cost, Rs	9000	3517	8640	26664
Salvage Value, Rs/day	900	351.7	864	2666.4
Depreciation Cost, Rs/day	2.22	1.08	2.13	2.63
Interest, (lpd)	1.63	0.64	1.56	4.82
Insurance, lpd	0.27	0.11	0.26	0.80
Total Fixed Cost	4.12	1.83	3.95	8.25
Labour Cost, Rs/day	250	250	250	250
Repair, Maint. Cost, Rs/day	1.97	0.77	1.89	5.84
Electric Cost, Rs/day	_	36	_	_
Petrol Charge, Rs/day	_	_	245	_
Lubrication Cost, Rs/day	_	_	49	_
Variable Cost, Rs/day	251.97	286.77	545.89	255.84
Total Cost, Rs/day	**256.09**	**288.60**	**549.85**	**264.10**

CHAPTER - VI

SUMMARY AND CONCLUSIONS

5.1 Summary

Lifting and carrying water for irrigation without electricity is a challenge. Lifting and carrying water to nearby pond/open well requires energy. In this study an attempt has been made if this can be met out from the kinetic energy of flowing water. This revolving of water wheel pumping system is eco- friendly and water pumping works on mechanical energy without electricity. The kinetic energy of flowing water can be utilized for some use full work like pumping. The energy produced by flowing water can be utilized for lifting and carrying water for different purposes such as irrigation and also for other rural works in remote areas. In the study "Development and Testing of Pumping Systems Powered by Kinetic Energy of Water" has been undertaken with following specific objectives:

1. Development of pumping systems based on kinetic energy of water.
2. Performance evaluation of developed systems for lifting and carrying water.
3. Economical evaluation of developed pumping systems.

A waterwheel operated pumping system for flowing water was developed at Department of Soil and Water Engineering, SVCAET and RS, FAE, IGKV, Raipur during the year 2018-19.

The cup type pumping system was tested at different suction heads and delivery heads. When the suction head (0.56 m) is constant and the delivery head is varying from 0.70 m to 1.30 m. It was seen that the discharge varying from 0.364 to 0.178 lps is decreasing as the discharge head increasing. So, it was observed that variation in delivery affecting the discharge very much. When the suction head varying from 0.22 m to 0.56 m and delivery head constant (1 m) it was seen that the discharge varying from 0.378 to 0.267 lps is decreasing as the discharge head

increasing. So, it was observed that variation in delivery affecting the discharge very much.

Spiral tube pumping system has shown certain constraints in the effective performance of the operation. When the water depth varies from 0.30 m to 0.46 m, it was seen that the discharge varying from 0.114 to 0.193 lps is increasing as the water depth to increasing discharge. So, it was observed that variation in depth affecting the discharge very much. When the water velocity varying from 0.41 m to 0.54 m and distance carrying water 20 m, it was seen that the discharge varying from 0.05 to 0.076 lps is increasing as the discharge water depth increasing. So, it was observed that variation in depth affecting the discharge very much.

The purpose of developing this systems is utilize the kinetic energy of flowing water can utilize for some use full work like pumping. The present research work is Carrie out in the field of Krishi Vigyan Kendra, Raipur, I.G.K.V., Raipur (C.G.) and other suitable locations of canal command area in Chhattisgarh state. The testing carried out to evaluate the performance of pumping systems. It was tested on the basic of water depth, suction head, delivery head, pump speed, pump discharge. This study revealed the meaningful findings, which may be developed further.

5.2 Conclusions

Based on the performance of pumping system and kinetic energy of water, following conclusions were obtained:

1. Two different types of pumping system viz. cup type and spiral tube have been developed and tested.
2. The cup type system can give a maximum discharge of 33609 lpd at suction head 0.22 m and delivery head of 0.70 m. While spiral tube system can give a discharge of 6566 lpd at water velocity of 0.54 m and carrying distance of 20 m.
3. Cost of operation per day for water wheel pumping system, electric pump, diesel pump and solar pump were found to be 256.09, 288.6, 549.85, 264.10 Rs/day respectively.

4. The developed system can fulfill the site specific water pumping requirement for pumping water from nearby nallah to the nearby pond, without utilizing electric and diesel pump.

5.3 Suggestions for future work

1. The water wheel pumping can be modified to directly set of operate a drip and micro sprinkler system.
2. This cup type water wheel pumping system can be modified to a suitable gear box mechanism can further improve the performance.
3. The spiral type water wheel pumping system can be modified to floating type water wheel.
4. A suitable pump, as per the existing condition in nallah can further enhance the performance of pumping system.

REFERENCES

Ahmed, S., Riaz, R., Anvar, M. 2016. Utilization of Water Flow in Existing Canal System for Power Generation through Flow Acceleration Using Converging Nozzles. American Journal of Engineering Research, 5 (5): pp-115-123.

Anurag, K., Saini R.P. 2014. Development of Hydro Kinetic Power Generation System. International Journal of Engineering Science & Advanced Technology, 4 (6): 464-477.

Anyim, and Kirke, B. 2011. Hydrokinetic turbine blades design and local construction techniques for remote communities. Energy for sustainable development, 15: 223-230.

Araoz, J, C.E, M.S.S.E. 1962.Study of water flow velocities in irrigation canals in Iraq and their mathematical analysis. Bull. Org. Mond. Sante Bull. Wid Hlth Org, 27: 99-123.

Chandler. H., Ferrira, E., Wackrow, R., Shiono, K. 2014. Surface and velocity measurement river and flume, The International Archives of the Photogrammetry, Remote Sensing and Spatial Information Sciences, 5 : 23 - 25.

Gharahjeh, S., Aydin, I., Sakarya, A.B.A. 2012. Discharge Formula for Sharp-Crested Rectangular Weirs. 10th International Congress on advances in Civil Engineering 1719.

Grabbe, M., Lalander, E., & Leijon, M. 2013. On the velocity distribution for hydro-kinetic energy conversion from tidal currents and rivers. Accepted with revisions, Journal of Renewable and Sustainable Energy, February 2013.

Gabric, O., and Hovany L. 2014. Parshall Flume Calibration for Free Flow. Contemporary achievements in Civil Engineering, pp – 24-25.

Hinkle, S.E.1989. Kinetic Energy and Momentum Measurement Consideration. American Society of Agriculture Engineering, 5(3) : pp - 386 – 391.

Ibrahim, A., Haron, H.C., Azhari C.H. 2018. Traditional Water Wheels as a Renewable Rural Energy. The Online Journal on Power and Energy `Engineering, 1 (2): pp 62-66.

Islam, M., Serazul, Hossai, M. Zakaria and Khadir, M. Abdul, "Design and Development of Pedal Pump for Low Lift Irrigation", JARD, 5(1&2)116-126.

Kassab, S.Z., Ahmed, A., Abdel, N., Sayed, E., Abdel, B. 2005. Coil Pump Performance under Variable Operating Conditions. Ninth International Water Technology Conference, Page: 665-672.

Kim, S. D., Lee, H. J., Oh, B. D. 2010. Investigation on Application of Parshall Flume for Flow Measurement of Low-Flow Season in Korea. Measurement Science Review, Volume 10 (4): pp – 111-115

Kumar, A., Saini R.P., 2014. Development of hydrokinetic power generation system: a review. International Journal of Engineering Science & Advanced Technology, 4 (6): 464-477.

Kumar Vinay.2017. A Review on Design and Performance Evaluation of Low Cost Water Wheel. International Journal of Engineering Technology Science and Research, 4 (6); pp – 393 - 397. www.ijetsr.com.

Kyaw, A. M., Kyaw, P. H., San, N. A. 2014. Design and Stress Analysis of Undershot Waterwheel for Water Pumping System. International Journal of Scientific Engineering and Technology Research, 03: pp - 2600-2605.

Lewis, B.J., Cimbala, J.M., Wouden, A.M. 2014.Major historical developments in the design of water wheels and Francis hydro turbines. Earth and Environmental Science 22**.**

Marten, G. 2013. Hydro kinetic energy conservation. Digital Comprehensive Summaries of Uppsala Dissertations from the Faculty of Science and Technology, pp: 290- 307.

Michael, A. M., Khepar, S. D., Sondhi, 2008. Water Wells and Pumps Second Edition. Tata McGraw Hill Education Private Limited New Delhi. pp: 391-500

Michael, A.M. 2009. Irrigation Theory and Practice. Vikas Publishing House PVT LTD, ISBM: 978-81259-1867-7.

Muller, G. 2012. Water wheels as a power source. The Queen's University of Belfast, Civil Engineering Department, David Keir Bldg., Stranmillis Rd, Belfast BT7 5AD.

Mishra, P., Verma, D., Sankhe, H., More, R. 2016. Spiral tube water wheel pump. International Journal on Recent and Innovation Trends in Computing and Communication, 4 (4): pp - 137 – 139.

Naegel, L.C.A., Real, J. G., Mazaredo, A.M. 1991. Desining a spiral pump for irrigation. Water lines volume - 10 NO.-2: pp – 30 – 31.

Nwajuaku, I. I., Okeke, C. H. 2017. Evaluation of Parshall flume efficiency for free flow condition open channel. Saudi Journal of Engineering and Technology Scholars Middle East Publishers Dubai:119-124, http://scholarsmepub.com.

Patel, P. K., Patel, M., Prrajapati, K., Rajput, N., Patel, U. 2017. Design of spiral tube agricultural water wheel pump. International Journal of Applied Research in Science and Engineering, 2 (1): pp- 560-565.

Sahu, K. 2018. Development and Testing of a Pedal Operated Rotary type Pumping System for Operating a Gravity Drip System of Irrigation. Unpublished M. Tech. thesis, Indira Gandhi Krishi Vishwavidyalaya, Raipur, and Chhattisgarh, India.

Sermaraj, M. Design and Fabrication of Pedal Operator Reciprocating Water Pump. IOSR Journal Of Mechanical And Civil Engineering (IOSR-JMCE), e-ISSN: 2278-1684, PP: 64-83

Singh, M. 2008. Mangal turbine water wheeled Documentation is for your personal reference and study only, Science for Villages, 01 Jun 2008. http://www.mangalturbine.com/profile.html.

Skogerboe, G. V., Hyatt, M. L; England, J. D.; and Johnson, J. R. 1966. Measuring Water with Parshall Flumes. Reports Paper 83.https://digitalcommons.usu.edu/water, rep/83.

Sule, L; Wardanba, L.N.G; Soenoko, R; Wahyudii, S. 2014. Angled and Curved Blades of Deep-Water Wheel Efficiency. Australian Journal of Basic and Applied Sciences, 8(6): 186-192

Thompson, P. L., Milonova, S., Reha, M., Mased, F., Troble, I. 2011. Coil Pump Design for a Community Fountain in Zambia. International Journal for Service Learning in Engineering, 6 (1): pp. 33-45.

Wagmare, S. N., Mestry, M. M., Lavekar, P. V., Misal, T. S., Nalawade, P. C. 2015. Manually operated spiral tube water wheel pump. International Research Journal of Engineering and Technology, 2 (1): pp 167-169 www.irjet.net.

Wolter, C., Muller, G. 2004. The breast shot water wheel; design and model test. Proceedings of the *Institution of Civil Engineers Engineering Sustainability*,157: Pages 1-9.

Wright, S. J., Taheri, B. 1991.Correction to Parshall Flume Calibrations at Low Discharges. Article in Journal of Irrigation and Drainage Engineering. pp-800- 804

Yelguntwar, P., Bhange, P., Lilhare, Y. and Bahadure, A. Design, fabrication & testing of a waterwheel for power generation in an open channel flow. IJREAT International Journal of Research in Engineering & Advanced Technology, 2(1): pp. 1-6.

Zaman, A., Khan, and T. 2012.Design of a Water Wheel for a Low Head Micro Hydropower System. Journal Basic Science and Technology, 1(3): 1-6.

Zengin, N., Aslan F., Artunç, N., Akta M.E., Omer, F.G. 2016. Design of hydrokinetic energy generation system. Cbu international conference on innovations in science and education march 23-25.

APPENDIX A

Table 1: Relation between discharge and lower depth of flow of parshall flume

S. No.	H_a (m)	H_b (m)	Discharge (lps)	Area (m^2)	Velocity (ms^{-1})	Mass (kg)	K.E. (Joule)
1.	0.23	0.15	37.02	0.06	0.61	37.02	7.09
2.	0.25	0.17	42.60	0.07	0.62	42.60	8.24
3.	0.27	0.20	49.10	0.08	0.63	49.01	9.52
4.	0.29	0.22	53.26	0.08	0.64	53.92	10.52
5.	0.30	0.23	59.50	0.09	0.66	59.50	12.85

Table 2: Relation between discharge and medium depth of flow of parshall flume

S. No.	H_a (m)	H_b (m)	Discharge (lps)	Area (m^2)	Velocity (ms^{-1})	Mass (kg)	K.E. (Joule)
1.	0.32	0.25	64.44	0.10	0.64	64.44	13.38
2.	0.35	0.26	73.56	0.10	0.71	73.56	18.30
3.	0.38	0.28	82.53	0.11	0.75	82.53	23.23
4.	0.41	0.30	92.83	0.12	0.77	92.83	27.77
5.	0.43	0.34	104.66	0.13	0.79	104.66	32.96

Table 3: Relation between discharge and higher depth of flow of parshall flume

S. No.	H_a (m)	H_b (m)	Discharge (lps)	Area (m^2)	Velocity (ms^{-1})	Mass (kg)	K.E. (Joule)
1.	0.45	0.36	109.55	0.14	0.78	109.55	33.54
2.	0.49	0.38	124.22	0.15	0.83	124.22	42.82
3.	0.54	0.42	143.53	0.16	0.87	143.53	54.33
4.	0.57	0.45	155.96	0.18	0.88	155.96	60.43
5.	0.59	0.48	168.31	0.19	0.89	168.31	66.75

APPENDIX B

Table 1: Testing of pump discharge at constant suction head (0.56m) and varying delivery head

S. No	H_a (m)	H_b (m)	Pulley rpm	Suction Head (m)	Delivery Head (m)	Friction Loss (m)	Total Head (m)	Dis-charge (lps)	Dis-charge (lpd)
1.	0.30	0.23	1274	0.56	0.70	0.07	1.33	0.364	31449
2.	0.29	0.22	1274	0.56	0.90	0.06	1.52	0.342	29548
3.	0.27	0.20	1261	0.56	1.10	0.06	1.72	0.303	26179
4.	0.25	0.17	1235	0.56	1.20	0.05	1.81	0.248	21427
5.	0.23	0.15	1222	0.56	1.30	0.05	1.91	0.178	15379

Table 2: Testing of pump discharge at varying suction head and also varying delivery head

S.No	H_a (m)	H_b (m)	Pulley RPM	Suction Head (m)	Delivery Head (m)	Friction Loss (m)	Total Head (m)	Dis-charge (lps)	Dis-charge (lpd)
1.	0.43	0.34	1300	0.22	0.7	0.07	0.99	0.389	33609
2.	0.41	0.30	1300	0.3	0.9	0.06	1.27	0.372	32140
3.	0.38	0.28	1287	0.42	1.1	0.06	1.58	0.321	27734
4.	0.35	0.26	1274	0.5	1.2	0.05	1.75	0.262	22636
5.	0.32	0.25	1248	0.56	1.3	0.05	1.91	0.192	16588

Table 3: Testing of pump discharge at varying suction head and constant delivery head (1m)

S.No.	H_a	H_b	Pulley RPM	Suction Head (m)	Delivery Head (m)	Friction Loss (m)	Total Head (m)	Dis-charge (lps)	Dis-charge (lpd)
1.	0.59	0.48	1326	0.22	1	0.07	1.29	0.378	32659
2.	0.57	0.45	1313	0.3	1	0.06	1.37	0.362	31276
3.	0.53	0.41	1287	0.42	1	0.06	1.48	0.332	28684
4.	0.49	0.38	1274	0.5	1	0.05	1.56	0.298	25747
5.	0.45	0.36	1261	0.56	1	0.05	1.61	0.267	23068

Table 4: Testing of pump discharge at Constant suction head and Varying Distance travel of water

S. No.	H_a (m)	H_b (m)	Pulley RPM	Suction head (m)	Delivery Head (m)	Friction Loss (m)	Dis-tance (m)	Dis-charge (lps)	Dis-charge (lpd)
1.	0.44	0.35	1300	0.56	0.17	0.11	0	0.342	29548
2.	0.39	0.29	1274	0.56	0.17	0.11	10	0.329	28425
3.	0.32	0.24	1261	0.56	0.17	0.10	20	0.308	26611
4.	0.28	0.19	1248	0.56	0.17	0.10	30	0.279	24105

Table 5: Testing of pump discharge at Varying suction head and Varying Distance travel of water

S. No	H_a (m)	H_b (m)	Pulley RPM	Suction head (m)	Delivery Head (m)	Friction Loss (m)	Dis-tance (m)	Dis-Charge (lps)	Dis-Charge (lpd)
1.	0.44	0.35	1326	0.25	0.17	0.12	0	0.392	33868
2.	0.39	0.29	1287	0.38	0.17	0.11	10	0.367	31708
3.	0.32	0.24	1274	0.45	0.17	0.11	20	0.331	28598
4.	0.28	0.19	1248	0.56	0.17	0.10	30	0.279	24105

APPENDIX C

Table 1: Testing of pump discharge varying water depth with 1m distance of carrying water

S. No.	Water Depth (m)	Water Velocity (ms^{-1})	Wheel RPM	Distance (m)	Discharge (lps)	Discharge (lpd)
1.	0.30	0.41	23	1	0.114	9849.6
2.	0.34	0.45	25	1	0.129	11145.6
3.	0.38	0.48	26	1	0.147	12700.8
4.	0.42	0.52	28	1	0.172	14860.8
5.	0.46	0.54	29	1	0.193	16675.2

Table 2: Testing of pump discharge varying water depth with 10m distance of carrying water

S. No.	Water Depth (m)	Water Velocity (ms^{-1})	Wheel RPM	Distance (m)	Discharge (lps)	Discharge (lpd)
1.	0.30	0.41	23	10	0.070	6022
2.	0.34	0.45	25	10	0.074	6419
3.	0.38	0.48	26	10	0.081	6972
4.	0.42	0.52	28	10	0.088	7594
5.	0.46	0.54	29	10	0.098	8467

Table 3: Testing of pump discharge varying water depth with 20m distance of carrying water

S. No.	Water Depth (m)	Water Velocity (ms^{-1})	Wheel RPM	Distance (m)	Discharge (lps)	Discharge (lpd)
1.	0.30	0.41	23	20	0.050	4354.56
2.	0.34	0.448	25	20	0.055	4717.44
3.	0.38	0.48	26	20	0.058	5028.48
4.	0.42	0.5178	28	20	0.065	5650.56
5.	0.46	0.54	28	20	0.076	6566.4

APPENDIX D

Table 1: Measurements of discharge and kinetic energy for rectangular weir.

S. No.	Width of weir (m)	Head of water (m)	Area (m^2)	Discharge (m^3s^{-1})	Velocity (ms^{-1})	Mass (kg)	K.E. (Joule)
1	1	0.1	0.1	0.06	0.58	58.19	9.85
2	1	0.2	0.2	0.16	0.82	164.57	55.72
3	1	0.3	0.3	0.30	1.01	302.34	153.54
4	1	0.4	0.4	0.47	1.16	465.59	315.19
5	1	0.5	0.5	0.65	1.30	650.54	550.62
6	1	0.6	0.6	0.86	1.43	855.15	868.56
7	1	0.7	0.7	1.08	1.54	1077.62	1256.93
8	1	0.8	0.8	1.32	1.65	1316.60	1782.99
9	1	0.9	0.9	1.57	1.75	1571.02	2393.48
10	1	1	1	1.84	1.84	1840	3114.75

APPENDIX E

Table 1: Free-flow discharge values for Parshall flumes

Head cm	Discharge (lps)		Head cm	Discharge (lps)	
	Throat Width			Throat Width	
	7.5 cm	15cm		7.5cm	15 cm
3	0.8	1.4	17	11.4	23.2
4	1.2	2.3	18	12.4	25.3
5	1.7	3.3	19	13.6	27.8
6	2.3	4.4	20	14.3	30.0
7	2.7	5.4	21	15.8	32.7
8	3.4	7.2	22	17.1	35.2
9	4.3	8.5	23	18.2	33.7
10	5.0	10.2	24	19.4	40.1
11	5.8	11.6	25	20.7	42.7
12	6.7	13.5	26	22.0	45.7
13	7.5	15.0	27	23.3	48.1
14	8.5	17.3	28	24.8	51.5
15	9.4	19.2	29	26.0	54.0
16	10.4	21.2	30	27.5	57.3

Table 2: Dimensions and capacities of Parshall flumes (Free- flow) of various sizes

Sections	Throat Width, cm		Sections	Throat Width, cm	
	7.5 cm	15 cm		7.5 cm	15 cm
A	31	41.4	G	30.5	61
B	45.5	61	K	2.5	7.6
C	17.8	39.4	N	5.7	11.5
D	26	39.7	X	2.5	5.1
E	45.5	61	Y	3.8	7.6
F	15	30.5	Discharge max.	28.4 (lps)	110.8 (lps)

APPENDIX F (a)

Economical evaluation of pumping systems

1. Operational cost of developed pumping system

Table 1: Material used fabrication of Waterwheel Pumping System

S. No.	Part	Material	Piece	Size (inch)	Price, ₹
1.	Main Frame	MS Angle	8	33”×40”	3000
2.	Carl Rim	Cost Iron	1	26”	700
3.	Cups	Cost Iron	16	5”	800
4.	Axel	Stainless stile	1	Φ = 20 mm	200
5.	Belt	Rubber	1	96”	300
6.	Bearing	Stainless stile	2	1”	200
7.	Doctor pump	Cost iron	1	1 HP	3000
8.	Socket	-	1	1”	400
9.	Suction pipe	PVC	1	1”	300
10.	Foot valve	PVC	1	1”	100
				Total	9000

1. Initial Cost of Water Wheel Pumping System

Cost of Pumping System / Capital Cost = 9000 /-

Economic Analysis

Following assumption was made for economic analysis of Pumping system

a. Expected life of Pumping System = 10 Years

b. Working hour (H) = 8760 h/y , when working hour is 24 h/day

c. Salvage value (S) = 900₹, 10% of capital cost

d. Labour required = 01

e. Rate of interest = 12% per annum

f. Repair and Maintenance = 8% Capital cost

g. Shelter and Insurance = 2% initial cost

1.1 Fixed Cost

a. Depreciation Cost

$$\text{Depreciation (D)/hr.} = \frac{C-S}{L \times H}$$

Where,

D = Depreciation per hour

C = Capital investment

S = Salvage value, 10% of initial cost

H = Number of working hour per year

L = Life of machine in year

$$\text{Depreciation (D)/hr.} = \frac{9000-900}{10 \times 8760}$$

$$D = 0.092 \text{ ₹/h} \times 24$$

$$D = 2.22 \text{ ₹/day}$$

b. Interest:

$$\text{Interest (I)/hr.} = \frac{c+s}{2} \times \frac{i}{H}$$

$$= \frac{9000+900}{2} \times \frac{0.12}{8760}$$

$$= 0.07 \text{ ₹/h} \times 24$$

$$I = 1.63 \text{ ₹/day}$$

c. Shelter and Insurance cost

Shelter is necessarily required against weather changes; shelter cost has been calculated at 2% of the average purchase price

$$SIC = \frac{C+S}{2} \times \frac{i}{H}$$

$$= \frac{9000+900}{2} \times \frac{0.02}{8760}$$

$$= 0.01 \text{ ₹/h} \times 24$$

$$SIC = 0.27 \text{ ₹/day}$$

Where,

I = Rate per year

Then, Total Fixed Cost = (2.22 + 1.63 + 0.27)

= 4.12₹/day

1.2 Variable Cost

a. Labour Cost

Labour requirement = 01

Labour Cost = 250 ₹/day

b. Repair & Maintained Cost

Repair and maintenance @ 8% of initial cost

$$= \frac{9000 \times 8}{8760 \times 100}$$

$$= 0.08 \text{ ₹/hr.} \times 24$$

= 1.97₹/day

Then, Total Variable Cost = 250 + 1.97

= 251.97₹/day

1.3 Total Cost of Pumping System

Total Cost of Pumping System = Variable Cost + Fixed Cost

= 251.97 + 33.22

= 256.09₹/d

APPENDIX F (b)

2 Operation cost of 1 HP Kirloskar Electric Pump

Table 2: Specification Kirloskar chotu star domestic use water pump

Product code	D11130101423	Motor body	Cast iron
Suc. X Del.	25 X 25 (mm)	Winding	Copper
Voltage	180 – 240 V	Phase	Single
Head	3 -30 m	Power (HP)	1 HP
Discharge	34 – 6 (lpm)	Power heavy duty	0.75 kw

Initial Cost of Electric Pump

Cost of Electric Pump / Capital Cost = 3517 /-

Economic Analysis

Following assumption was made for economic analysis of Electric Pump

a. Expected life of Electric pump = 8 Years
b. Working hour (H) = 5840 h/y , when working hour is 16 h/day
c. Salvage value (S) = 351.7 ₹, 10% of capital cost
d. Labour required = 01
e. Rate of interest = 12% per annum
f. Repair and Maintenance = 8% Capital cost
g. Electric charge per unit = 4 ₹

2.1 Fixed Cost

a. Depreciation Cost

$$\text{Depreciation (D)/hr.} = \frac{C-S}{L \times H}$$

$$\text{Depreciation (D)/day} = \frac{3517-351.7}{8\times5840} \times 16$$

$$D = 1.08 ₹$$

b. Interest: An annual charge of interest was calculated on the basis of actual rate of interest payable and average purchase price by the following formula:

$$\text{Interest (I)/day} = \frac{c+s}{2} \times \frac{i}{H}$$

$$= \frac{3517+351.7}{2} \times \frac{0.12}{5840}$$

$$= 0.04 ₹/\text{hr.} \times 16$$

$$I = 0.64 ₹/\text{day}$$

c. Insurance cost

Shelter is necessarily required against weather changes; shelter cost has been calculated at 2% of the average purchase price

$$Sc = \frac{C+S}{2} \times \frac{i}{H}$$

$$= \frac{3517+351.7}{2} \times \frac{0.02}{5840}$$

$$= 0.01 ₹/\text{hr.} \times 16$$

$$Sc = 0.11 ₹/\text{day}$$

Then, Total Fixed Cost = (1.08 + 0.64 + 0.11)

= 1.83₹/day

2.2 Variable Cost

a. Energy Consumption

$$= [\frac{750}{1000}] \times 4₹/\text{unit}$$

$$= 3₹/\text{hr.}$$

b. Electric charge

Electric Charge (kWh) $= \frac{\text{Total Power (W)} \times \text{Total Time(t)}}{1000}$

$= \frac{750 \times 3}{1000}$

$= 12 \times 3$

$= 36$₹/day

c. Labour Cost

Labour requirement = 01 when working hour is 8 h/day

Labour Cost = 250 ₹/day

d. Repair & Maintained Cost

Repair and maintenance @ 8% of initial cost

$= \frac{3517 \times 8}{5840 \times 100}$

= 0.05 ₹/hr.

= 0.77 ₹/day

Then, Total Variable Cost = 36 + 250 + 0.77

= 286.77₹/day

2.3 Total Cost of Electric Pumping System

Total Cost of Pumping System = Variable Cost + Fixed Cost

= 286.77 + 1.83

= 287.90₹/day

APPENDIX F (c)

3 Operational Cost of Kiloskar 1.5 HP Diesel pump

Table 3: Specification of Self priming centrifugal pump Diesel engine pump

Model No.	KK- WPP- 15	Engine type	4 stroke
Fuel tank capacity	1.3 Ltr	Head	20 m
Weight	12 kg	Power (HP)	1.5 HP
Engine Display	98 cc	Engine Speed	3600 RPM
Suc. + Del.	40 X 40 mm	Output Capacity	12000 lph

Initial Cost of Electric Pump

Cost of Electric Pump / Capital Cost = 8640 /-

Economic Analysis

Following assumption was made for economic analysis of Diesel Pump

a. Expected life of Electric pump = 10 Years
b. Annual use of pumping system can be calculated as follows
c. Working hour (H) = 1022 h/y,when working hour is 2.8 h/day
d. Salvage value (S) = 10% of capital cost
e. Labour required = 01
f. Fuel Cost (Diesel) = 70 ₹/Ltr
g. Fuel Consumption = 1.25 Ltr/hr.
h. Lubrication Cost = 20% Fuel Cost
i. Rate of interest = 12% per annum
j. Repair and Maintenance = 8% Capital cost

3.1 Fixed Cost

a. Depreciation Cost

$$\text{Depreciation (D)/hr.} = \frac{C-S}{L \times H}$$

$$\text{Depreciation (D)/day} = \frac{8640-864}{10 \times 876} \times 2.8$$

$$D = 2.13 \text{ ₹}$$

b. Interest: An annual charge of interest was calculated on the basis of actual rate of interest payable and average purchase price by the following formula:

$$\text{Interest (I)/day} = \frac{c+s}{2} \times \frac{i}{H}$$

$$= \frac{8640+864}{2} \times \frac{0.12}{876}$$

$$= 0.56 \text{ ₹/hr} \times 2.8$$

$$I = 1.56 \text{ ₹/day}$$

Where,

I = Interest per hour

c. Insurance cost

Shelter is necessarily required against weather changes; shelter cost has been calculated at 2% of the average purchase price

$$Sc = \frac{C+S}{2} \times \frac{i}{H}$$

$$= \frac{8640+864}{2} \times \frac{0.02}{876}$$

$$= 0.11 \text{ ₹/hr} \times 2.8$$

$$Sc = 0.26 \text{ ₹/day}$$

Then, Total Fixed Cos = 2.13 + 1.56 + 0.26

= 3.95 ₹/day

3.2 Variable Cost

a. Fuel Consumption

$= 1.25 \times 70$

$= 87.5$ Ltr/hr

b. Fuel Cost

$= 87.5 \times 2.8$

$= 245$₹/day

c. Lubrication cost

$= 245 \times \frac{20}{100}$

$= 49$₹/day

c. Labour Cost

Labour requirement = 01 when working hour is 8 h/day

Labour Cost = 250 ₹/day

d. Repair & Maintained Cost

Repair and maintenance @ 8% of initial cost

$= \frac{8640 \times 8}{876 \times 100}$

$= 0.68$₹/hr $\times 2.8$

$= 1.89$₹/day

Then, Total Variable Cost = 245 + 49 + 250 + 1.89

= 633.39₹/day

3.3 Total Cost of Fuel pump

Total Cost of Fuel pump = Variable Cost + Fixed Cost

= 545.89 + 3.95

= 549.85₹/day

APPENDIX F (d)

4. Operation cost of 1hp solar panel pumping system

Table 4: Specification of solar panel (260 W) pumping system

Solar Panel		Pumping system	
Material	Polycrystalline Panel	Motor Winding	Copper
Rated Power Range	240-270 W	Head	10-49 m
Module Voltage	24 V	Phase	Single
Number of Cells	60	Power (HP)	1HP
Operating Voltage	24 V	Discharge	100-20 LPM
Dimension	982 (W) x 1639 (H) x 35 (T) mm	Power (KW)	0.75 kW
Module Weight	17.30 Kg	Voltage	180-220 V

Initial Cost of Solar Pump

Table 5: Initial cost of 1 HP Solar Panel pump

S. No.	Product	Material	Piece	Rs, ₹
1	Solar Panel	Polycrystalline Panel	3	21744
2	Solar Pump	S. Steel	1	4120
3	Pipe & Wire	PVC	4	800
			Total	26664 /-

Economic Analysis

Following assumption was made for economic analysis of Solar Pump

a. Expected life of Electric pump = 25 Years
b. Annual use of pumping system can be calculated as follows
c. Working hour (H) = 2482 h/when working hour is 6.8 h/day
d. Salvage value (S) = 2666.4₹/day, 10% of capital cost
e. Labour required = 01
f. Lubrication Cost = 20% Fuel Cost
g. Rate of interest = 12% per annum
h. Rate of Insurance = 2 % Capital Cost
i. Repair and Maintenance = 8% Capital cost

4.1 Fixed Cost

a. Depreciation Cost

$$\text{Depreciation (D)/hr} = \frac{C-S}{L \times H}$$

$$\text{Depreciation (D)/day} = \frac{26664-2666.4}{10 \times 2482} \times 6.8$$

$$D = 2.63 \text{ ₹}$$

b. Interest: An annual charge of interest was calculated on the basis of actual rate of interest payable and average purchase price by the following formula:

$$\text{Interest (I)/day} = \frac{c+s}{2} \times \frac{i}{H}$$

$$= \frac{26664+2666.4}{2} \times \frac{0.12}{2482}$$

$$= 0.71 \text{ ₹/hr} \times 6.8$$

$$I = 4.82 \text{ ₹/day}$$

c. Insurance cost

Shelter is necessarily required against weather changes; shelter cost has been calculated at 2% of the average purchase price

$$Sc = \frac{C+S}{2} \times \frac{i}{H}$$

$$= \frac{26664+2666.4}{2} \times \frac{0.02}{2482}$$

$$= 0.12 \text{ ₹/hr.} \times 6.8$$

$$Sc = 0.80 \text{ ₹/day}$$

Then, Total Fixed Cost = 2.63 + 4.82 + 0.80

= 8.25₹/day

4.2 Variable Cost

c. Labour Cost

Labour requirement = 01 when working hour is 8 h/day

Labour Cost = 250 ₹/day

d. Repair & Maintained Cost

Repair and maintenance @ 8% of initial cost

$$= \frac{26664 \times 8}{2480 \times 100}$$

= 0.86₹/hr. × 6.8

= 5.84₹/day

Then, Total Variable Cost = 250+5.84

= 255.84₹/day

4.3 Total Cost of Solar Pump pump

Total Cost of Solar Pump pump = Variable Cost + Fixed Cost

= 255.84 + 8.85

= 264.10₹/day

RESUME

Name : Fanesh Kumar

Contact Information

Contact no. : 9691481369, 9981475563

Email ID : faneshsahu1994@gmail.com

Present Address : Maharishi Arvind New Boys Hostel (Block-A),
Near sat yam Hostel, IGKV, Raipur (C.G.)

Permanent Address : Vill. Post. - Giroud, Block- Magarload
Dist.-Dhamtari 493662 (C.G.)

Personal Information

Father's Name : Mr. Pooran Lal Sahu

Mother's Name : Late Mrs. Khorbaharin Bai

Sex : Male

Date of Birth : 05-12-1994

Religion : Hindu

Caste : OBC

Academic Qualification

S. No.	Exam/Degree	Year	Institute/University
1.	B.Tech (Agril. Engg.)	2017	IGKV, Raipur (C.G.)
2.	12th	2013	CGBSE, Raipur (C.G.)
3.	10th	2011	CGBSC, Raipur (C.G.)